DOE–EM/GJ1220-2008

Environmental Management - Grand Junction Office

UMTRA Project

Operations, Maintenance, and Performance Monitoring Plan for the Interim Action Ground Water Treatment System

Volume 2

Moab UMTRA Project

Revision 4
April 2008

U.S. Department of Energy

Office of Environmental Management

Work Performed by the Technical Assistance Contractor Under DOE Contract No. DE-AC30-07CC60012 for the U.S. Department of Energy Office of Environmental Management, Grand Junction, Colorado.

Attachment 1

Construction Drawings

UNITED STATES DEPARTMENT OF ENERGY

MOAB PROJECT

GROUND WATER INTERIM ACTION REMEDIATION MOAB PROJECT, SITE

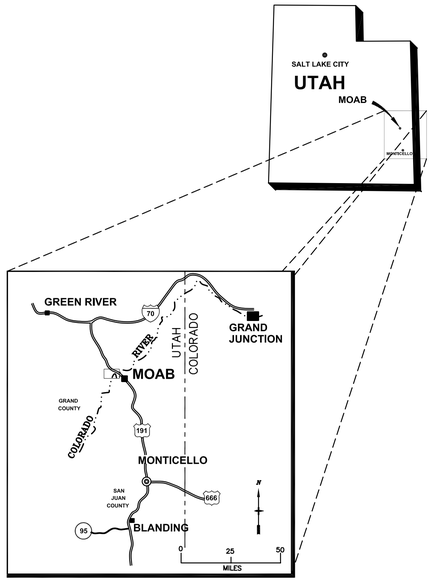

INDEX OF DRAWINGS

SHEET	TITLE	DRAWING NO.
1	TITLE SHEET	X00349–R03–T01–D+ (1)
2	PROJECT SITE PLAN	X00350–R01–F01–D+ (1)
3	EVAPORATION POND GRADING PLAN/CROSS SECTIONS	X00351–R00–C01–D+
4	EVAPORATION POND PUMP STATION YARD PLAN	X00352–R00–C02–D+
5	LINER DETAILS	X00353–R00–C03–D+
6	WELL FIELD PIPELINE; PLAN AND PROFILE	X00354–R01–P01–D+ (1)
7	WELL FIELD PLAN AND DETAILS	X00355–R01–C04–D+
8	POND PIPING	X00356–R00–M01–D+
9	WELL VAULT DETAILS	X00357–R01–M02–D+ (2)
10	MISCELLANEOUS PIPE DETAILS	X00358–R00–M03–D+
11	EVAPORATION POND PUMP PLAN/VIEWS	X00359–R00–M04–D+
12	INTAKE BARGE DETAILS	X00361–R00–M05–D+
13	ELECTRICAL SITE PLAN AND LEGEND	X00362–R01–E01–D+ (1)
14	ELECTRICAL ONE–LINE DIAGRAM	X00363–R01–E02–D+
15	WELL FIELD ELECTRICAL PLANS AND DETAILS	X00365–R01–E03–D+ (2)

ABBREVIATIONS

APPROX.	APPROXIMATE
BOTT.	BOTTOM
℄	CENTER LINE
CLR	CLEAR
CONC.	CONCRETE
CONT.	CONTINUATION
CORP.	CORPORATION
CSP	CORRUGATED STEEL PIPE
DIA. OR Ø	DIAMETER
EA.	EACH
DOE	DEPARTMENT OF ENERGY
E	EASTING
ELL	ELBOW
EL. OR ELEV.	ELEVATION
EQUA	EQUATION
EXIST	EXISTING
FH	FIRE HYDRANT
FLG	FLANGE
F.P.	FLOOD PLAIN
GA	GAUGE
GALV.	GALVANIZED
GPM	GALLONS PER MINUTE
G.I.P.	GALVANIZED IRON PIPE
HORIZ.	HORIZONTAL
INV	INVERT
MAX.	MAXIMUM
MH	MANHOLE
MIN.	MINIMUM
MW	MONITORING WELL
N	NORTHING
NA	NOT APPLICABLE
NO.	NUMBER
NOM	NOMINAL
N.I.C.	NOT IN CONTRACT
NPT	NATIONAL PIPE THREAD
NTS	NOT TO SCALE
OC	ON CENTER
OD	OUTSIDE DIAMETER
P.C.	POINT OF CURVATURE
PIP	PLASTIC IRRIGATION PIPE
P.I.	POINT OF INTERSECTION
P.O.B.	POINT OF BEGINNING
P.T.	POINT OF TANGENCY
PLC'S.	PLACES
PVC	POLYVINYL CHLORIDE
P.V.I.	POINT OF VERTICAL INTERSECTION
ROW	RIGHT–OF–WAY
SCH	SCHEDULE
SHT	SHEET
STA.	STATION
THK.	THICK
TP	TURNING POINT
TYP	TYPICAL
UDOT	UTAH DEPARTMENT OF TRANSPORTATION
UG	UNDERGROUND
UMTRA	URANIUM MILL TAILINGS REMEDIAL ACTION
VERT.	VERTICAL
V.P.I.	VERTICAL POINT OF INTERSECTION
WV	WATER VALVE

PLAN VIEW

- BOUNDARY OF WORK
- BURIED TELEPHONE/OPTICAL/ ELECTRICAL/GAS LINES
- RAILROAD TRACK
- WIRE FENCE
- CHAIN LINK FENCE
- DRAINAGE DITCH
- EXISTING ASPHALT ROAD/PARKING LOT
- EXISTING UNIMPROVED DIRT ROAD
- GRADE BREAK LINES
- OVERHEAD ELECTRICAL LINE
- TREES/SHRUBS/BRUSH
- UTILITY POLE
- UNDERGROUND DRAINAGE CULVERT
- XXXX EXISTING MONITORING WELL
- SLOPE/FLOW ARROW
- TOP OF SLOPE
- SURVEY CONTROL POINT
- 6 DEPTH OF CONTAMINATION

WELL LEGEND

- BOREHOLE VIBRATING WIRE PIZOMETER
- WELL VIBRATING WIRE PIZOMETER
- WELL PIZOMETER
- WELL MONITORING/PUMPING

SECTION

- COMMON BORROW
- COMPACTED SOIL
- UNDISTURBED SOIL
- ROAD BASE
- CONCRETE
- SAND OR BEDDING MATERIAL
- GRAVEL OR DRAIN ROCK

DETAIL SYMBOL

1 — DETAIL NUMBER/SECTION LETTER

2 — SHEET ON WHICH DETAIL/SECTION IS TAKEN FROM

3 — SHEET ON WHICH DETAIL/SECTION IS DRAWN

DRAWING LEGEND

- CONTAMINATED MATERIAL
- 5210 EXISTING CONTOUR
- 5210 NEW CONTOUR
- BUILDING/STRUCTURE
- EXISTING ASPHALT SURFACE

REVISION NO.	DATE	DESCRIPTION	DRAWN BY	CHECKED BY	PROJECT A/E	APPROVAL
2	7/31/03	SHEET 9 – WELL TABLE	JDB	MWM	TTWTTL	JE
2	5/14/03	SHEET 15 – WELLFIELD RELOCATION	CJW	MWM	TTWTTL	JE
1	5/12/03	ADDENDUM NO. 1	CJW	MWM	TTWTTL	JE

U.S. DEPARTMENT OF ENERGY
GRAND JUNCTION OFFICE
GRAND JUNCTION, COLORADO

Work Performed by
S. M. Stoller Corporation
Under DOE Contract
No. DE–AC13–02GJ79491

PROJECT LOCATION: MOAB, UTAH

REFERENCE

APPROVALS		DATE
DRAWN BY:	J. BAVIERE	4/28/03
ENGINEER:	M. MADRIL	4/28/03
PROJECT ENGINEER:	M. MADRIL	4/28/03
APPROVED BY:	J. ELMER	4/28/03
PROJECT MANAGER:	T. WRIGHT	4/28/03
DOE CONCURRENCE		

MOAB PROJECT
GROUND WATER INTERIM ACTION REMEDIATION

TITLE SHEET

PROJECT NO. MOA–999–0006–06–006
DRAWING NO. X00349–R03–T01–D+
SHT. 1 OF 15

N:\MOA\999\0006\06\006\X00349\X0034903.DWG 08/01/03 10:27am J50191

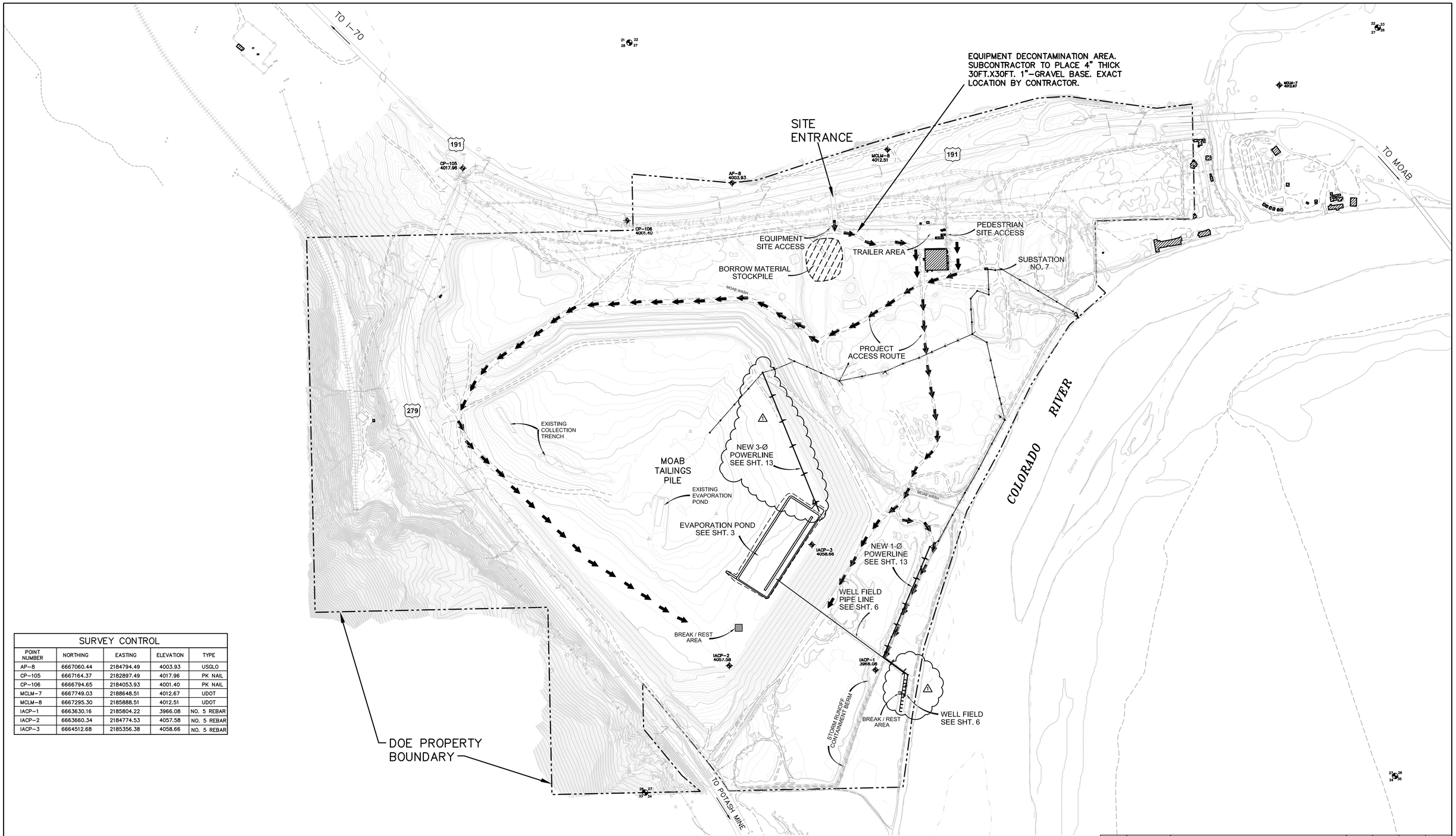

SURVEY CONTROL				
POINT NUMBER	NORTHING	EASTING	ELEVATION	TYPE
AP-8	6667060.44	2184794.49	4003.93	USGLO
CP-105	6667164.37	2182897.49	4017.96	PK NAIL
CP-106	6666794.65	2184053.93	4001.40	PK NAIL
MCLM-7	6667749.03	2188648.51	4012.67	UDOT
MCLM-8	6667295.30	2185888.51	4012.51	UDOT
IACP-1	6663630.16	2185804.22	3966.08	NO. 5 REBAR
IACP-2	6663660.34	2184774.53	4057.58	NO. 5 REBAR
IACP-3	6664512.68	2185356.38	4058.66	NO. 5 REBAR

N

MOAB SITE PLAN

SCALE IN FEET
300 150 0 300 600 900

CONTOUR INTERVAL = 10 FEET

THIS DRAWING IS FOR THE SOLE USE OF THE U.S. DEPARTMENT OF ENERGY AND ITS CONTRACTORS. IT IS NOT A LAND SURVEY PLAT, UTILITY LOCATION PLAT, OR OTHER IMPROVEMENT SURVEY PLAT AND IS NOT TO BE RELIED UPON FOR THE ESTABLISHMENT OF FENCE, BUILDING, OR OTHER FUTURE IMPROVEMENT LINES.

REVISION NO.	DATE	DESCRIPTION	DRAWN BY	CHECKED BY	PROJECT A/E	APPROVAL
1	5/12/03	ADDENDUM NO. 1	CJW	MWM	TTW/TTL	JE

U.S. DEPARTMENT OF ENERGY
GRAND JUNCTION OFFICE
GRAND JUNCTION, COLORADO

Work Performed by
S. M. Stoller Corporation
Under DOE Contract
No. DE-AC13-02GJ79491

PROJECT LOCATION: MOAB, UTAH

REFERENCE

APPROVALS		
DRAWN BY:	J. BAVIERE	4/28/03
ENGINEER	M. MADRIL	4/28/03
PROJECT ENGINEER	M. MADRIL	4/28/03
APPROVED BY:	J. ELMER	4/28/03
PROJECT MANAGER	T. WRIGHT	4/28/03
DOE CONCURRENCE		

MOAB PROJECT
GROUND WATER INTERIM ACTION REMEDIATION

PROJECT SITE PLAN

PROJECT NO. MOA-999-0006-06-006
DRAWING NO. X00350-R01-F01-D+
SHT. 2 OF 15

N:\MOA\999\0006\06\006\X00350\X0035001.DWG 05/08/03 11:20am WhitneyJ

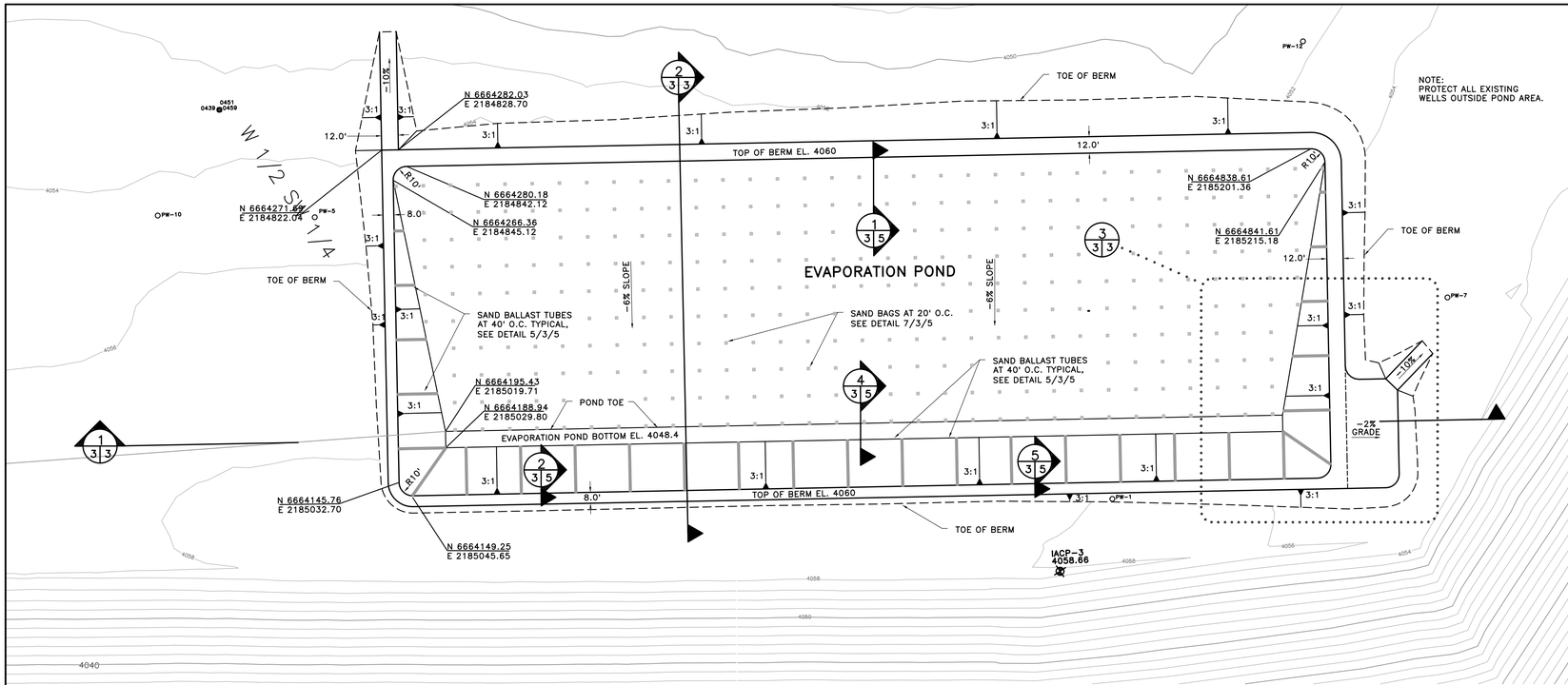

PLAN

SCALE IN FEET
50 25 0 50 100 150
CONTOUR INTERVAL = 2 FEET

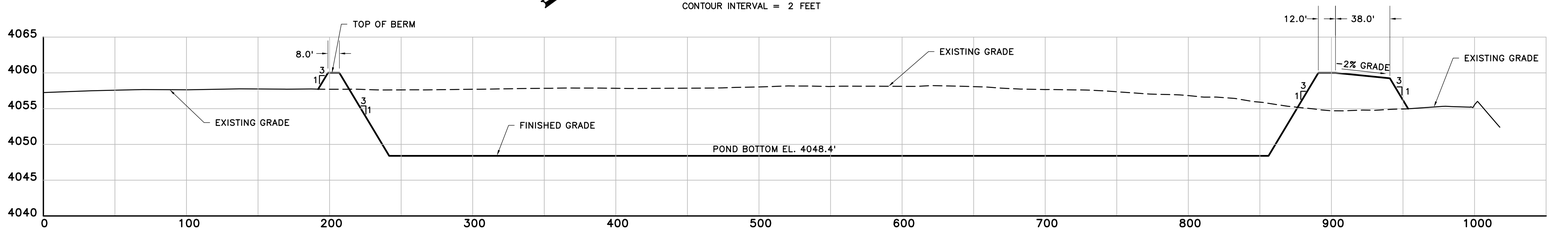

1/3 EVAPORATION POND

SCALE: HORZ. 1" = 50'
VERT. 1" = 10'

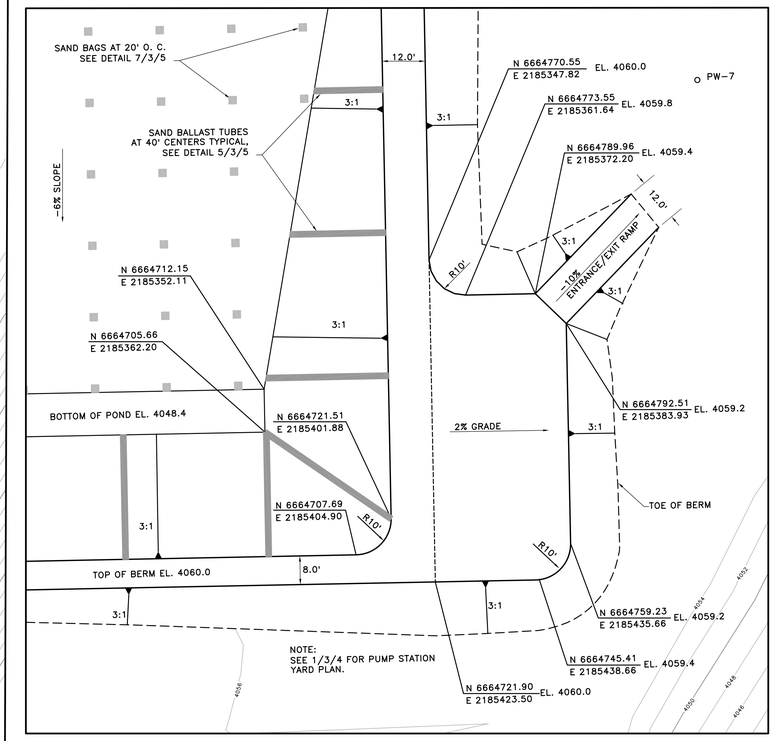

3/3 PLAN DETAIL

SCALE IN FEET
20 10 0 20 40 60
CONTOUR INTERVAL = 2 FEET

EARTHWORK CUT/FILL QUANTITIES (CY)		
WORK AREA	CUT	FILL
EVAPORATION POND	17,567	16,178
FILL REQUIRED @ 10% SHRINKAGE		17,796
FILL DEFICIT (TAKE FROM BORROW MATERIAL STOCKPILE)		229

NOTE:
APPROXIMATELY 100 CY WILL BE EXCAVATED INTO TAILINGS SAND BELOW THE OVERBURDEN OF THE POND. THIS MATERIAL SHALL BE USED FOR CONSTRUCTION OF THE LOWER HALF OF THE POND BERM.

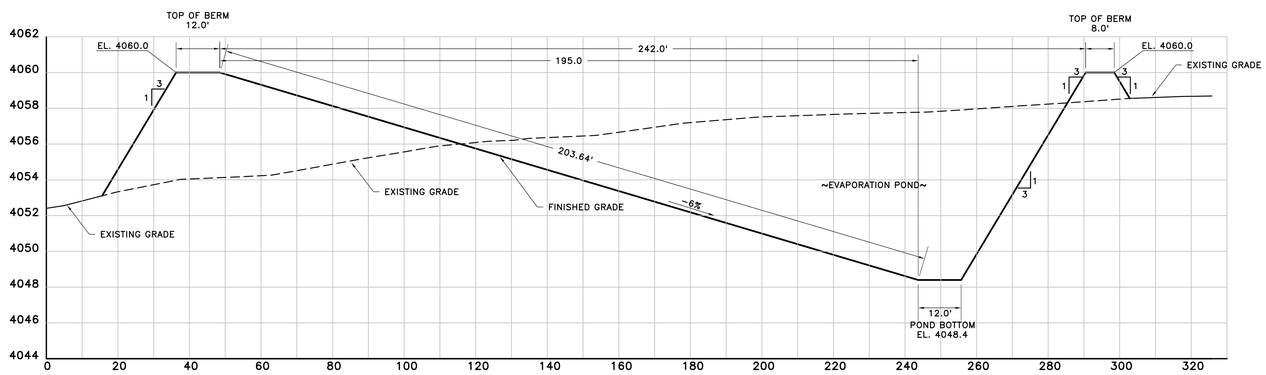

2/3 POND BERM SECTION

SCALE: HORZ. 1" = 20'
VERT. 1" = 4'

NOTE:

1. SEE SHEET 5 FOR LINER DETAILS.

REVISION NO.	DATE	DESCRIPTION	DRAWN BY	CHECKED BY	PROJECT A/E	APPROVAL

U.S. DEPARTMENT OF ENERGY
GRAND JUNCTION OFFICE
GRAND JUNCTION, COLORADO

Work Performed by
S. M. Stoller Corporation
Under DOE Contract
No. DE-AC13-02GJ79491

PROJECT LOCATION: MOAB, UTAH

REFERENCE

APPROVALS		DATE
DRAWN BY:	J. BAVIERE	4/28/03
ENGINEER	D. NORDEEN	4/28/03
PROJECT ENGINEER		
APPROVED BY:	J. ELMER	4/28/03
PROJECT MANAGER	T. WRIGHT	4/28/03
DOE CONCURRENCE		

MOAB PROJECT
GROUND WATER INTERIM ACTION REMEDIATION

EVAPORATION POND
GRADING PLAN/
CROSS SECTIONS

PROJECT NO. MOA-999-0006-06-006
DRAWING NO. X00351-R00-C01-D+
SHT. 3 OF 15

N:\MOA\999\0006\06\006\X00351\X0035100.DWG 05/14/03 1:29pm WhitneyJ

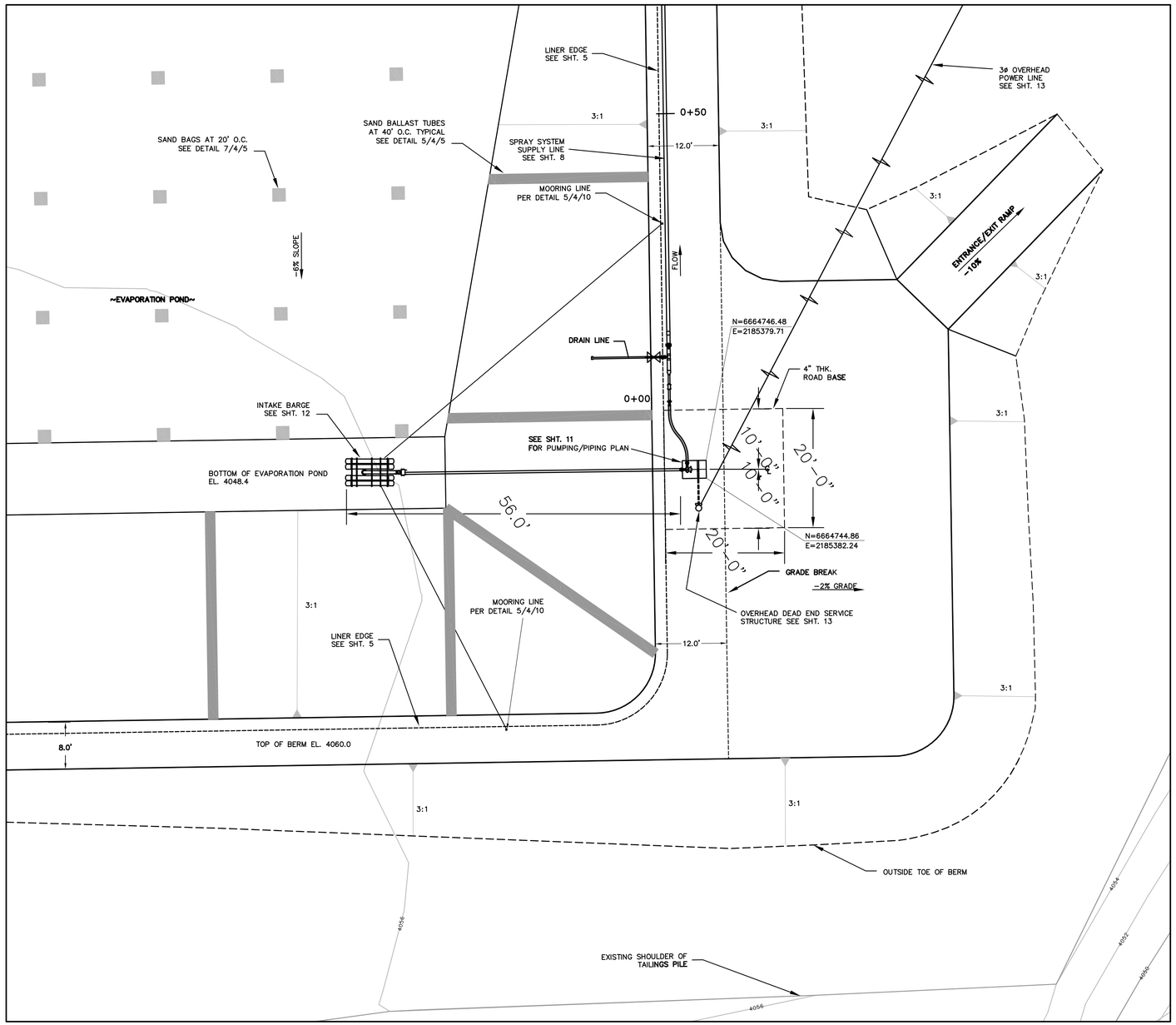

1 / 4

EVAPORATION POND PUMP STATION YARD PLAN

SCALE: 1" = 10'-0"

3,8

N

REVISION NO.	DATE	DESCRIPTION	DRAWN BY	CHECKED BY	PROJECT A/E	APPROVAL

U.S. DEPARTMENT OF ENERGY
GRAND JUNCTION OFFICE
GRAND JUNCTION, COLORADO

Work Performed by
S. M. Stoller Corporation
Under DOE Contract
No. DE-AC13-02GJ79491

PROJECT LOCATION: MOAB, UTAH

REFERENCE

APPROVALS		DATE
DRAWN BY:	J. WHITNEY	4/28/03
ENGINEER	M. MADRIL	4/28/03
PROJECT ENGINEER		
APPROVED BY:	J. ELMER	4/28/03
PROJECT MANAGER	T. WRIGHT	4/28/03
DOE CONCURRENCE		

MOAB PROJECT
GROUND WATER INTERIM ACTION REMEDIATION

EVAPORATION POND
PUMP STATION
YARD PLAN

PROJECT NO. MOA-999-0006-06-006
SHT. 4 OF 15
DRAWING NO. X00352-R00-C02-D+

N:\MOA\999\0006\06\006\X00352\X0035200.DWG 05/06/03 4:17pm J50191

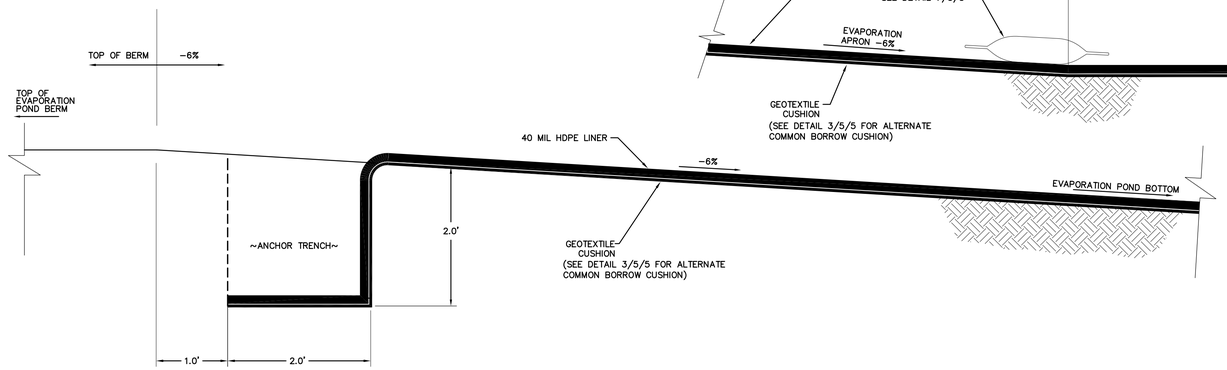

1/3|5 APRON ANCHOR TRENCH DETAIL

SCALE: 1" = 1.0'

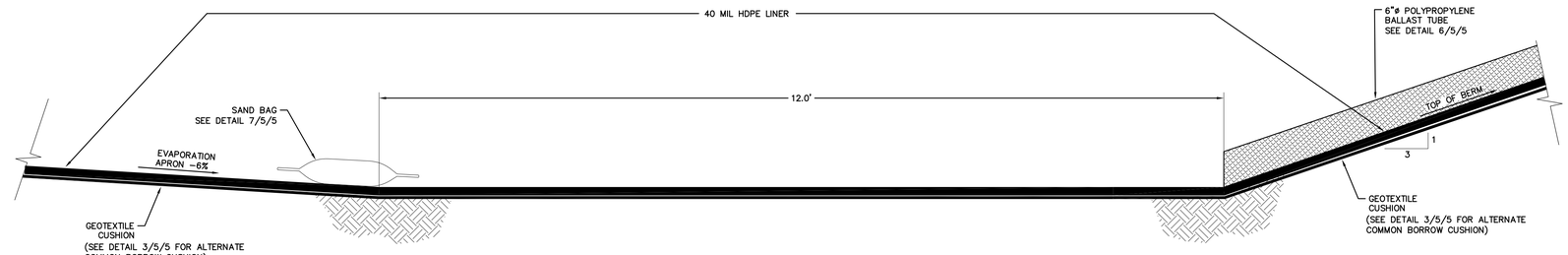

4/3|5 EVAPORATION POND BOTTOM

SCALE: 1" = 1.0'

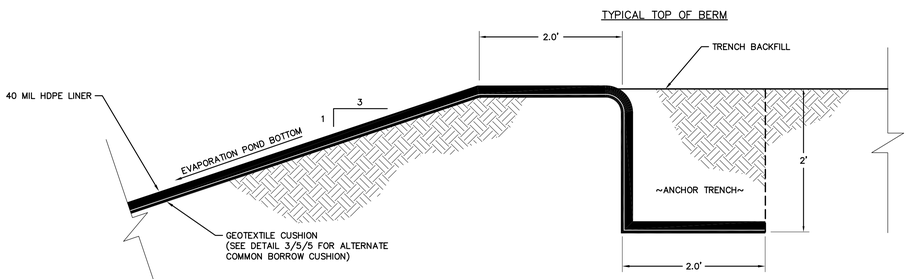

2/3|5 TYPICAL ANCHOR TRENCH DETAIL

SCALE: 1" = 1.0'

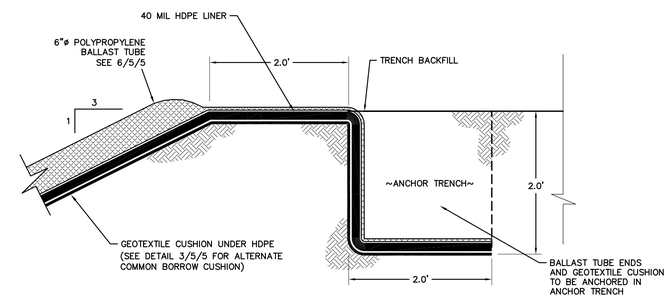

4/3|5 TYPICAL SAND BALLAST TUBE INSTALLATION DETAIL

SCALE: 1" = 1.0'

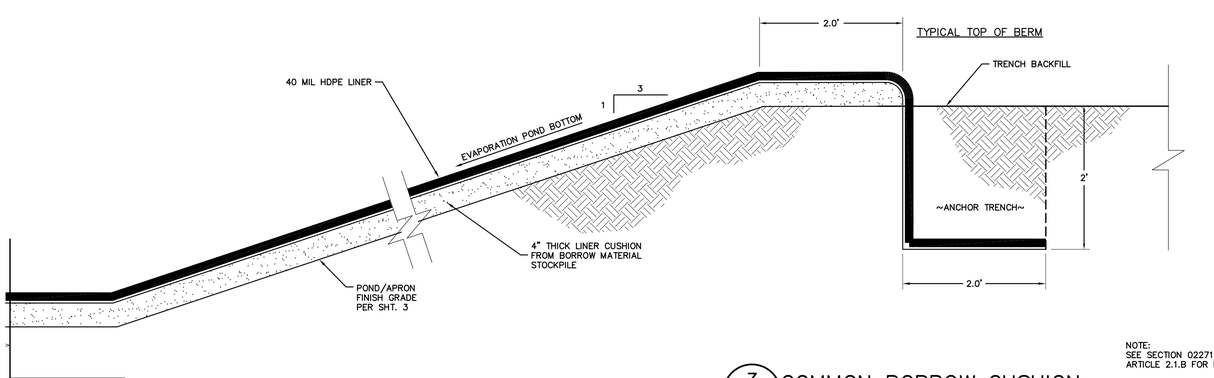

3/5|5 COMMON BORROW CUSHION

SCALE: 1" = 1.0'

NOTE:
SEE SECTION 02271; OF THE SPECIFICATION, ARTICLE 2.1.B FOR LINER CUSHION OPTION.

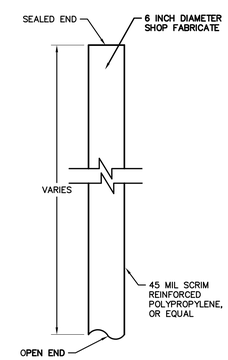

6/5|5 SAND BALLAST TUBE DETAIL

SCALE: 1" = 1.0'

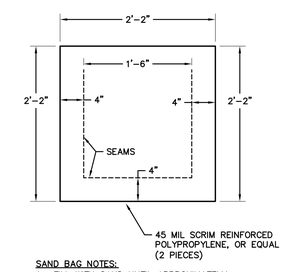

SAND BAG NOTES:

1. FILL WITH SAND UNTIL APPROXIMATELY 0.5' THICK.
2. SHOP FABRICATE SAND BAG, LEAVE ONE END OPEN FOR FILLING, THERMALLY WELD TO CLOSE IN FIELD.

7/5|5 SAND BAG DETAIL

SCALE: 1" = 1.0'

3,4,5

NOTES:

1. ALL GEOSYNTHETICS SHALL BE ANCHORED, AS NECESSARY DURING INSTALLATION TO PREVENT SLIPPAGE.
2. LINER MATERIAL SHOWN USING VERTICAL EXAGGERATION FOR CLARITY.
3. HIGH DENSITY POLYETHYLENE = HDPE
4. PLACE BACKFILL IN ANCHOR TRENCHES AND COMPACT IN THE FOLLOWING MANOR:
   1) SPREAD LOOSE MATERIAL IN LIFTS 12 INCHES (MAXIMUM) 12 THICK, MEASURED BEFORE COMPACTION, WHERE SELF-PROPELLED POWER COMPACTION EQUIPMENT IS USED.
   2) LIFTS TO 4 INCHES (MAXIMUM) THICK, MEASURED BEFORE COMPACTION, WHERE MECHANICAL HAND COMPACTION EQUIPMENT IS USED.
   3) COMPACT ANCHOR TRENCH MATERIAL TO 90 PERCENT (MINIMUM) OF ASTM D 698 MAXIMUM DRY DENSITY, AND WITHIN -2 TO +2 PERCENT OF THE OPTIMUM MOISTURE CONTENT.
   4) COMPACTION TO BE DONE USING PERFORMANCE BASED COMPACTION METHOD AS DESCRIBED IN SECTION 02200 OF THE SPECIFICATIONS.

REVISION NO.	DATE	DESCRIPTION	DRAWN BY	CHECKED BY	PROJECT A/E	APPROVAL

U.S. DEPARTMENT OF ENERGY
GRAND JUNCTION OFFICE
GRAND JUNCTION, COLORADO

Work Performed by
S. M. Stoller Corporation
Under DOE Contract
No. DE-AC13-02GJ79491

PROJECT LOCATION: MOAB, UTAH

REFERENCE

APPROVALS		DATE
DRAWN BY:	J. BAVIERE	4/28/03
ENGINEER	D. NORDEEN	4/28/03
PROJECT ENGINEER		
APPROVED BY:	J. ELMER	4/28/03
PROJECT MANAGER	T. WRIGHT	4/28/03
DOE CONCURRENCE		

MOAB PROJECT
GROUND WATER INTERIM ACTION REMEDIATION

LINER DETAILS

PROJECT NO. MOA-999-0006-06-006
DRAWING NO. X00353-R00-C03-D+
SHT. 5 OF 15

N:\MOA\999\0006\06\006\X00353\X0035300.DWG 04/28/03 12:39pm WhitneyJ

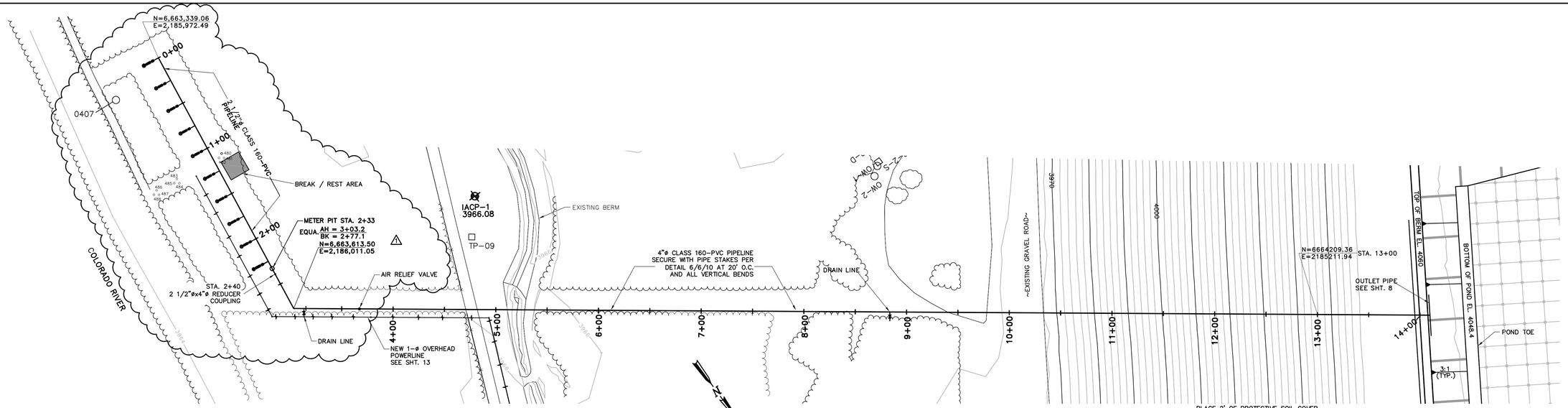

PLAN

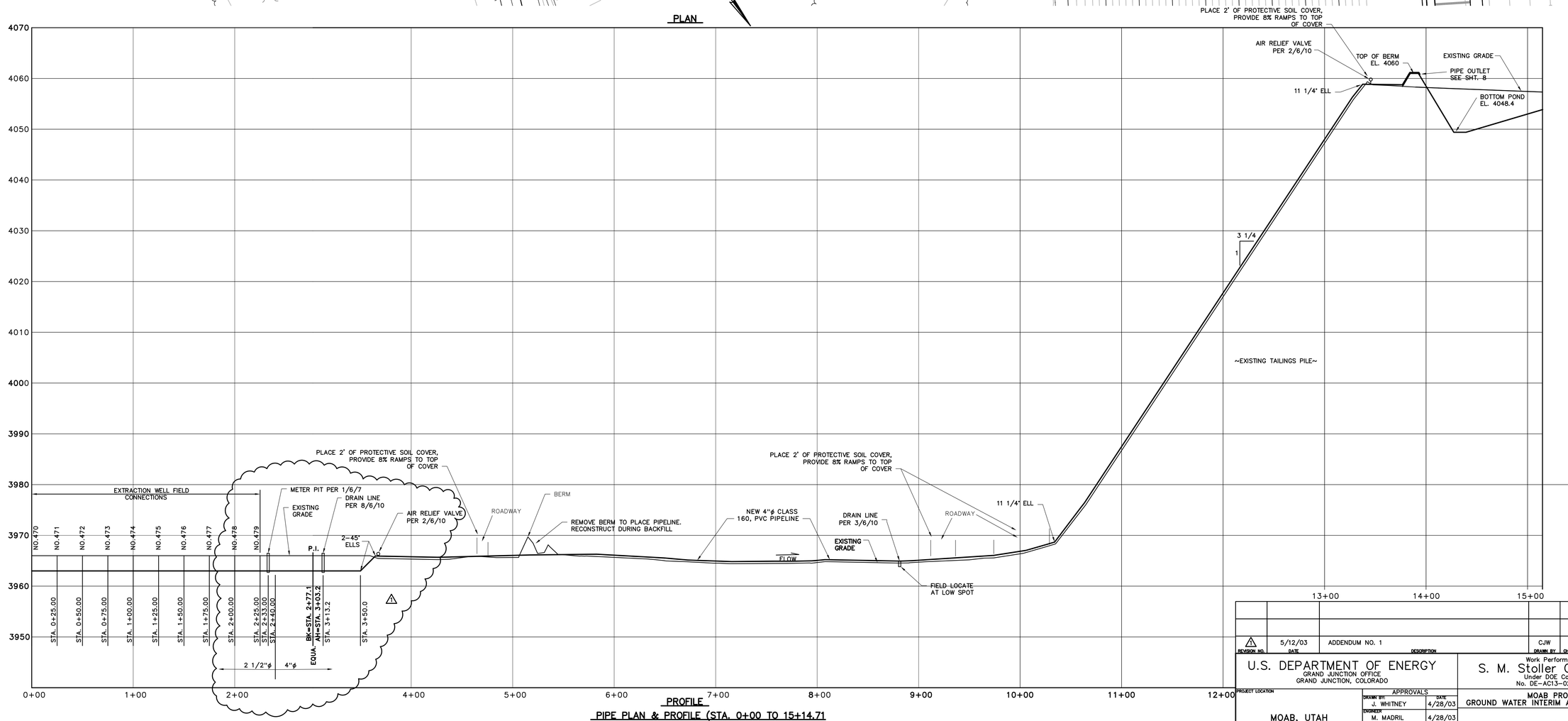

PROFILE

PIPE PLAN & PROFILE (STA. 0+00 TO 15+14.71

SCALE: HORZ: 1"=50'-0"
VERT: 1"=10'-0"

REVISION NO.	DATE	DESCRIPTION	DRAWN BY	CHECKED BY	PROJECT A/E	APPROVAL
1	5/12/03	ADDENDUM NO. 1	CJW	MWM	TTW/TTL	JE

U.S. DEPARTMENT OF ENERGY
GRAND JUNCTION OFFICE
GRAND JUNCTION, COLORADO

Work Performed by
S. M. Stoller Corporation
Under DOE Contract
No. DE-AC13-02GJ79491

PROJECT LOCATION: MOAB, UTAH

REFERENCE

APPROVALS		DATE
DRAWN BY:	J. WHITNEY	4/28/03
ENGINEER	M. MADRIL	4/28/03
PROJECT ENGINEER	M. MADRIL	4/28/03
APPROVED BY:	J. ELMER	4/28/03
PROJECT MANAGER	T. WRIGHT	4/28/03
DOE CONCURRENCE		

MOAB PROJECT
GROUND WATER INTERIM ACTION REMEDIATION

WELL FIELD PIPELINE; PLAN AND PROFILE

PROJECT NO. MOA-999-0006-06-006
DRAWING NO. X00354-R01-P01-D+
SHT. 6 OF 15

N:\MOA\999\0006\06\006\X00354\X0035401.DWG 05/08/03 09:58am Whitneyj

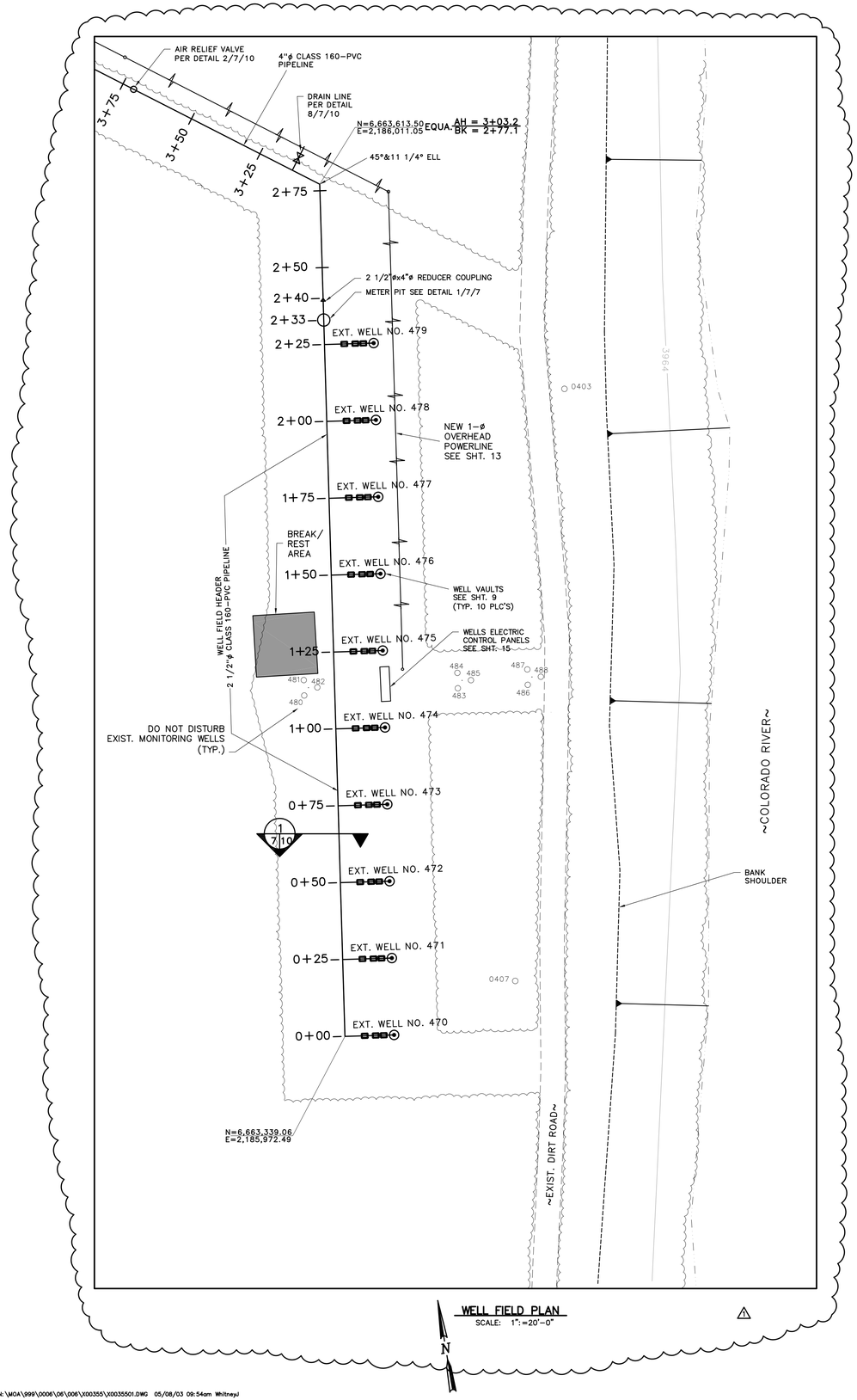

WELL FIELD PLAN
SCALE: 1":=20'-0"

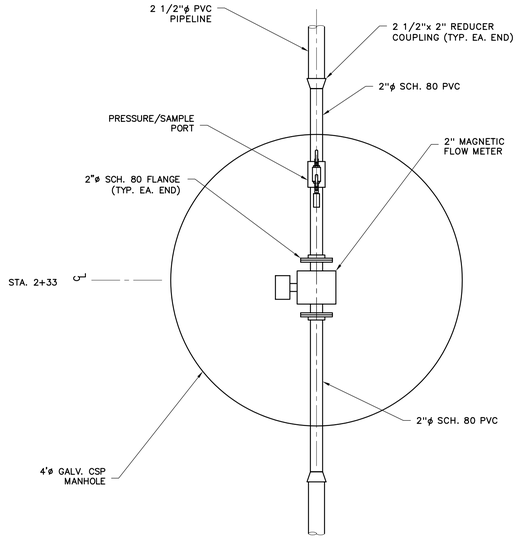

PLAN

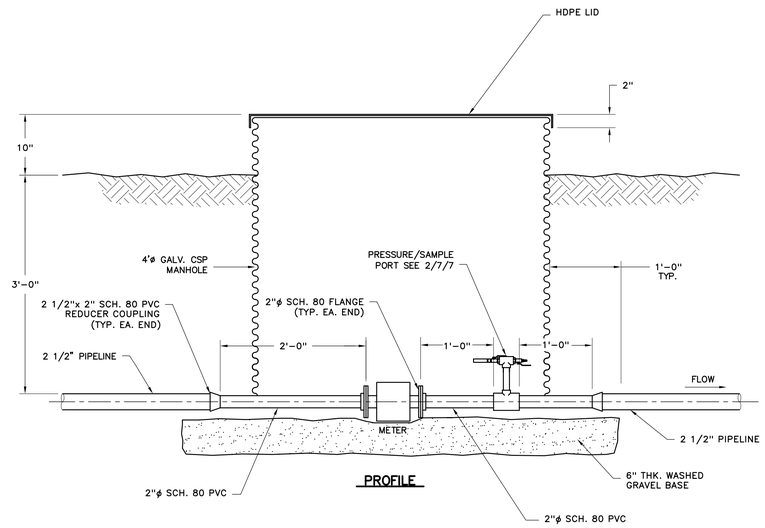

PROFILE

1 | 7 METER PIT DETAIL
SCALE: 1" = 1'-0"

6,7

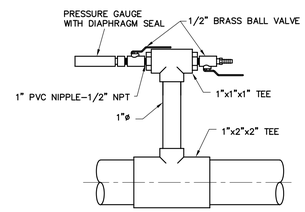

NOTE:

1"ø AND SMALLER PIPE FITTINGS TO BE SCH. 80 PVC.

2 | 7 7 PRESSURE GAUGE DETAIL
SCALE: 1" = 4"

REVISION NO.	DATE	DESCRIPTION	DRAWN BY	CHECKED BY	PROJECT A/E	APPROVAL
1	5/12/03	ADDENDUM NO. 1	CJW	MWM	TTWTL	JE

U.S. DEPARTMENT OF ENERGY
GRAND JUNCTION OFFICE
GRAND JUNCTION, COLORADO

Work Performed by
S. M. Stoller Corporation
Under DOE Contract
No. DE-AC13-02GJ79491

PROJECT LOCATION: MOAB, UTAH

REFERENCE:

APPROVALS		DATE
DRAWN BY:	J. WHITNEY	4/28/03
ENGINEER:	M. MADRIL	4/28/03
PROJECT ENGINEER:	M. MADRIL	4/28/03
APPROVED BY:	J. ELMER	4/28/03
PROJECT MANAGER:	T. WRIGHT	4/28/03
DOE CONCURRENCE:		

MOAB PROJECT
GROUND WATER INTERIM ACTION REMEDIATION

WELL FIELD PLAN AND DETAILS

PROJECT NO. MOA-999-0006-06-006
DRAWING NO. X00355-R01-C04-D+
SHT. 7 OF 15

N:\MOA\999\0006\06\006\X00355\X0035501.DWG 05/08/03 09:54am WhitneyJ

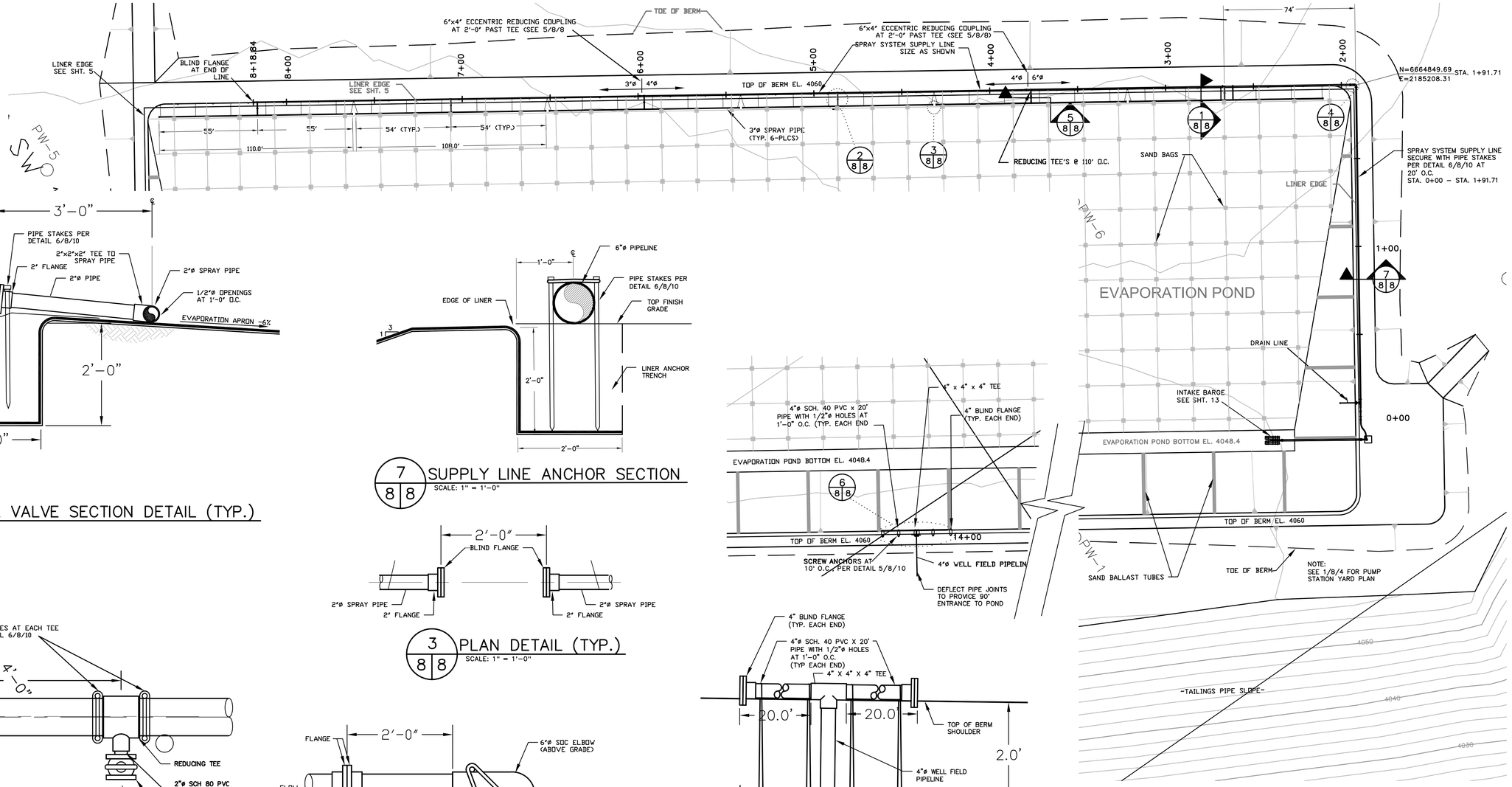

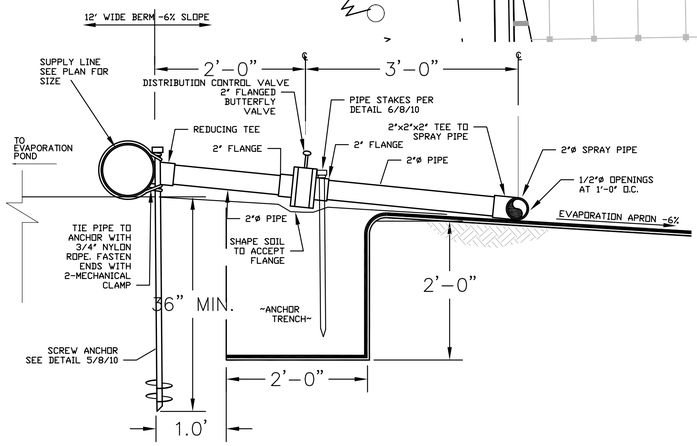

1/8/8 DISTRIBUTION CONTROL VALVE SECTION DETAIL (TYP.)
SCALE: 1" = 1'-0"

7/8/8 SUPPLY LINE ANCHOR SECTION
SCALE: 1" = 1'-0"

3/8/8 PLAN DETAIL (TYP.)
SCALE: 1" = 1'-0"

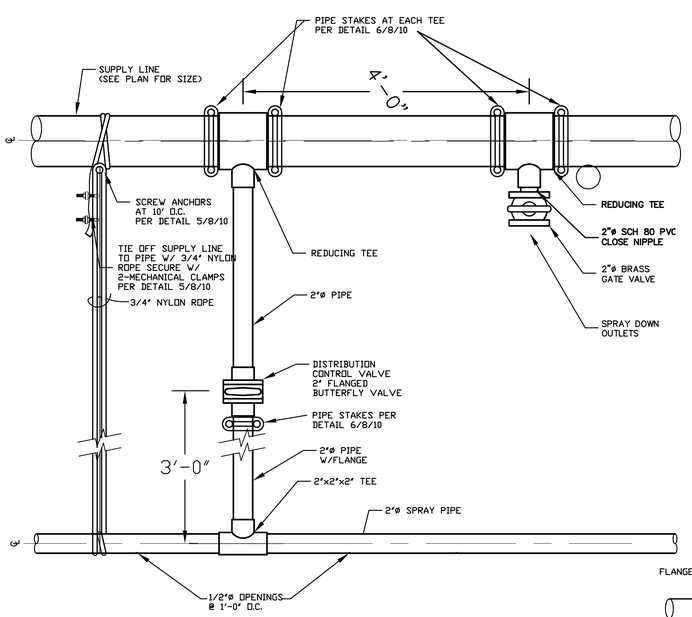

2/8/8 DISTRIBUTION CONTROL VALVE PLAN DETAIL (TYP.)
SCALE: 1" = 1'-0"

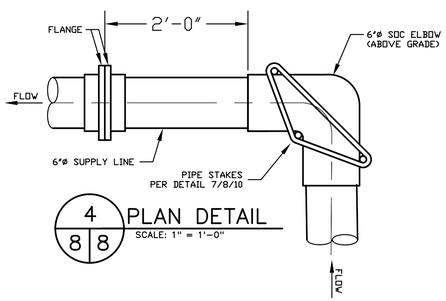

4/8/8 PLAN DETAIL
SCALE: 1" = 1'-0"

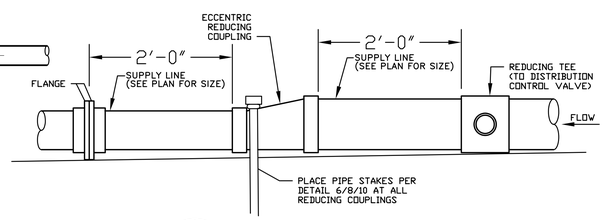

5/8/8 ELEVATION DETAIL (TYP.)
SCALE: 1" = 1'-0"

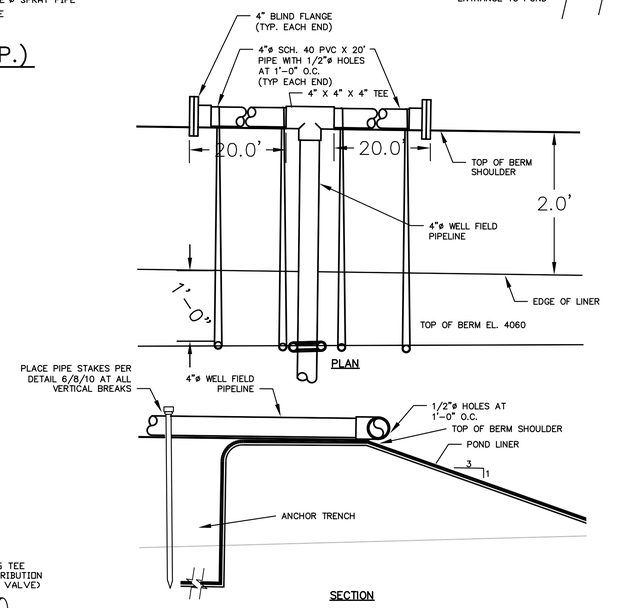

6/8/8 WELL FIELD PIPELINE OUTLET DETAIL
SCALE: 1" = 1'-0"

POND PIPING PLAN

SCALE IN FEET
30 15 0 30 60 90
CONTOUR INTERVAL = 2 FEET

NOTES:

1. ALL SUPPLY LINES, SPRAY PIPE AND ASSOCIATED PIPING AND FITTINGS SHALL BE SCH. 40 PVC.
2. ALL FLANGES SHALL BE VAN STONE STYLE WITH PLASTIC RING.
3. PIPE DIAMETERS ON DETAILS NOT DRAWN TO SCALE.

REVISION NO.	DATE	DESCRIPTION	DRAWN BY	CHECKED BY	PROJECT A/E	APPROVAL

U.S. DEPARTMENT OF ENERGY
GRAND JUNCTION OFFICE
GRAND JUNCTION, COLORADO

Work Performed by
S. M. Stoller Corporation
Under DOE Contract
No. DE-AC13-02GJ79491

PROJECT LOCATION: MOAB, UTAH

REFERENCE

APPROVALS		DATE
DRAWN BY:	J. WHITNEY	4/28/03
ENGINEER	M. MADRIL	4/28/03
PROJECT ENGINEER		
APPROVED BY:	J. ELMER	4/28/03
PROJECT MANAGER	T. WRIGHT	4/28/03
DOE CONCURRENCE		

MOAB PROJECT
GROUND WATER INTERIM ACTION REMEDIATION

POND PIPING

PROJECT NO. MOA-999-0006-06-006
DRAWING NO. X00356-R00-M01-D+
SHT. 8 OF 15

N:\MOA\999\0006\06\006\X00356\X0035600.DWG 05/06/03 4:19pm J50191

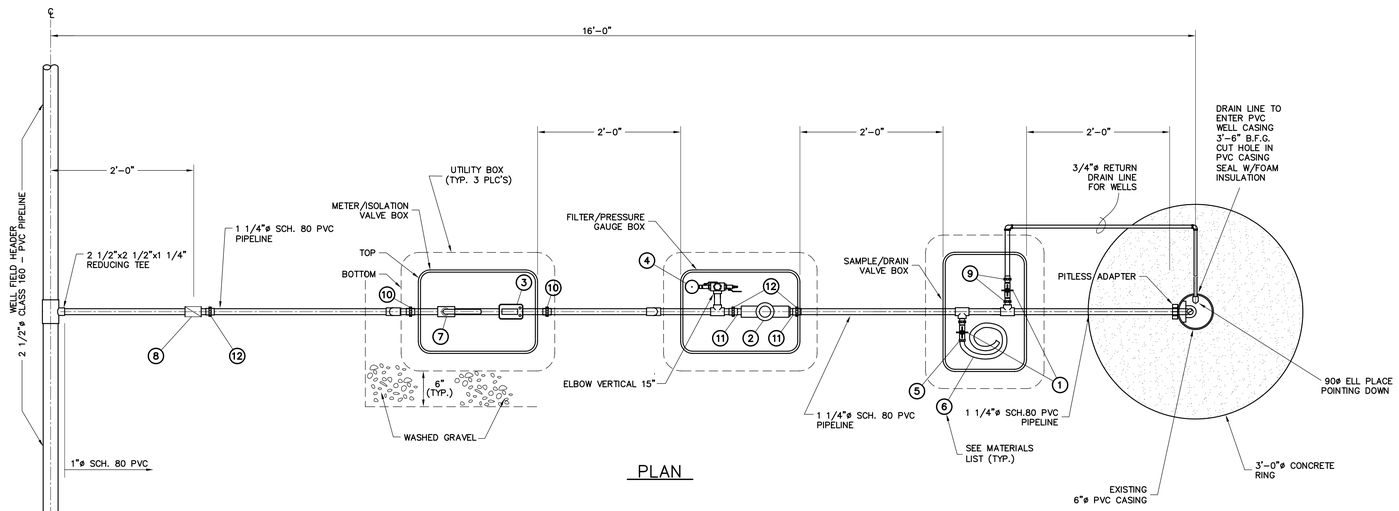

PLAN

MATERIALS LIST (PER WELL LOCATION)				
ITEM NO.	QTY.	SIZE	MATERIAL	DESCRIPTION
1	2	3/4"	BRASS	IRRIGATION STRAIGHT GLOBE VALVE, CROSS HANDLE
2	1	1 1/2"	PVC	"T" – FILTER w/ 60 MESH CARTRIDGE
3	1	1"	NYLON	ELECTRONIC DIGITAL METER;
4	1	NA	ST. STEEL	PRESSURE GAUGE PER DETAIL 1/9/9
5	1	3/4"	BRASS	NPTx 3/4" HOSE ADAPTER
6	1	3/4"	RUBBER	RUBBER HOSE, 6-FOOT, BARE END
7	1	1"	BRASS	BALL VALVE
8	1	1 1/4"	BRASS	CHECK VALVE
9	2	3/4"	PVC	UNION
10	5	1"	PVC	UNION
11	2	1 1/4"x1 1/2"	PVC	BUSHING
12	3	1 1/4"	PVC	UNION

1. ALL PVC FITTINGS SHALL BE SCH. 80
2. SUBCONTRACTOR SHALL BE RESPONSIBLE FOR SUPPLYING AND INSTALLING MISCELLANEOUS FITTINGS TO PROVIDE A PROPER OPERATING SYSTEM (I.E. BUSHINGS, THD'DxSLIP ADAPTERS).

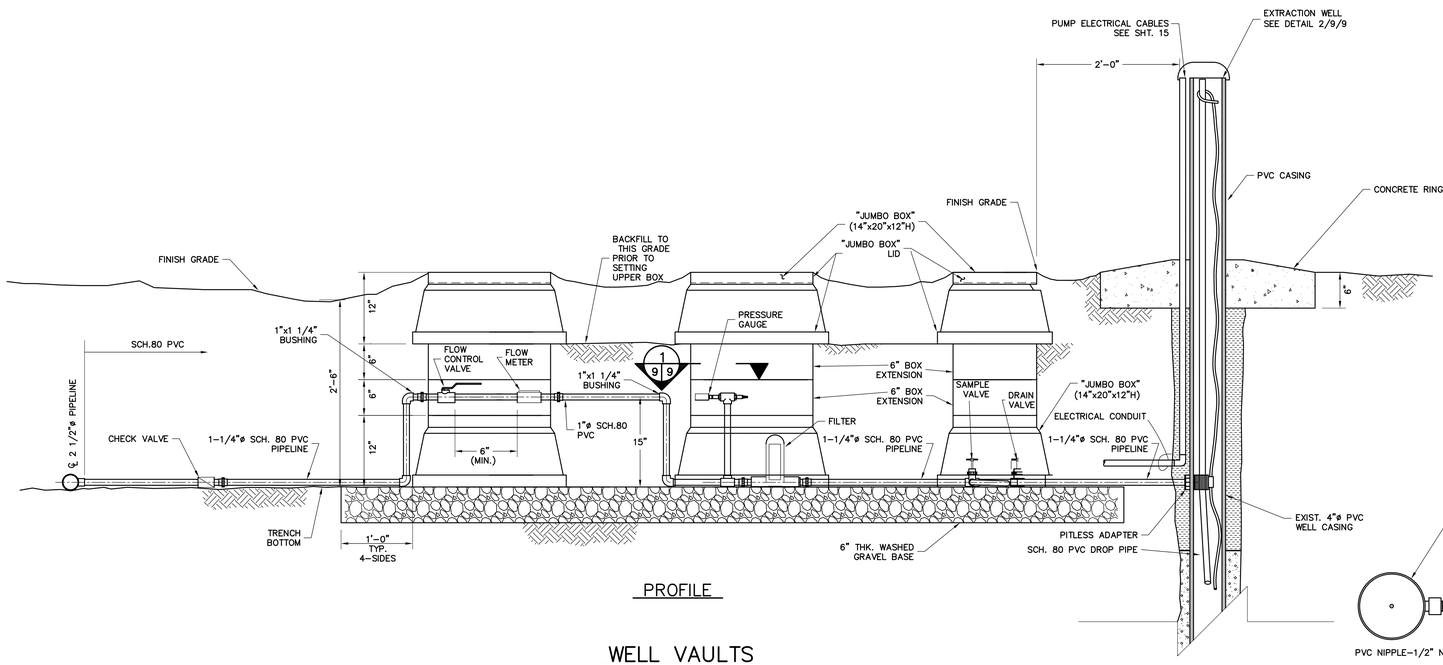

PROFILE

WELL VAULTS

SCALE: 1" = 1'-0"

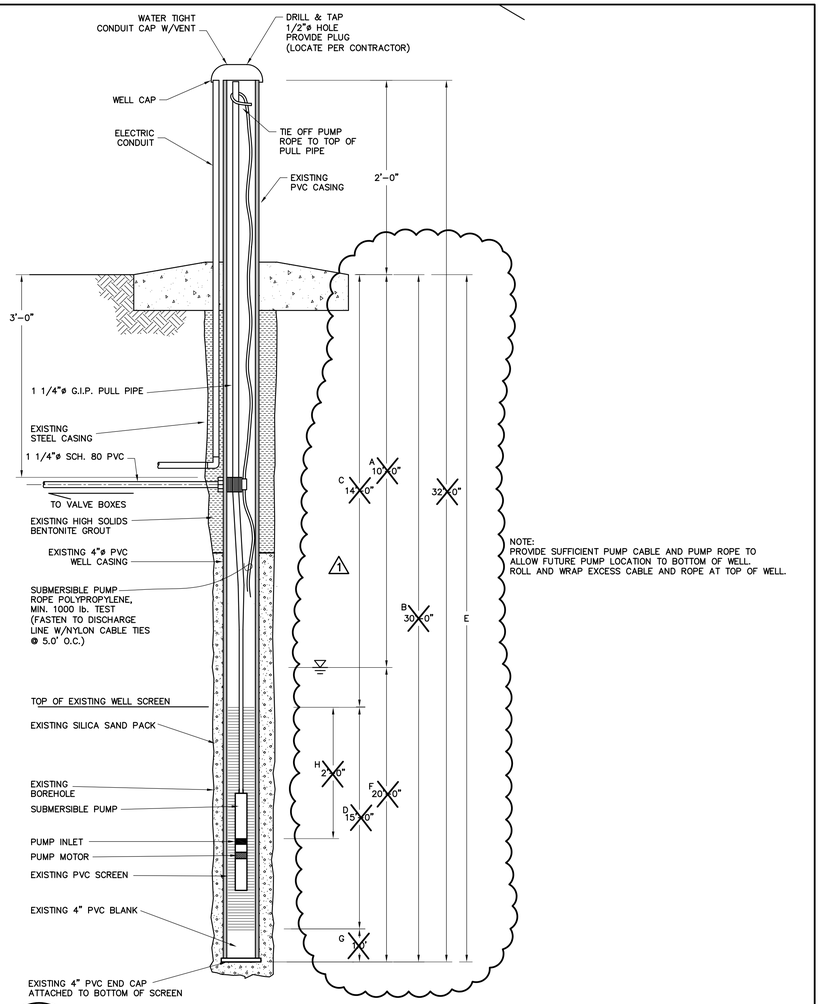

NOTE:
PROVIDE SUFFICIENT PUMP CABLE AND PUMP ROPE TO ALLOW FUTURE PUMP LOCATION TO BOTTOM OF WELL. ROLL AND WRAP EXCESS CABLE AND ROPE AT TOP OF WELL.

2 / 9 9 TYPICAL EXTRACTION WELL DETAIL

N.T.S.

NOTE: WELL TO BE INSTALLED BY OTHERS

WELL TABLE

WELL NO.	A* DTW*	B TD	C TOS	D SL	E PID	F* TST*	G S	H* WAPI*
470	12.8	21.3	10.3	9.4	17	8.5	1.6	4.2
471	12.9	21.3	10.3	9.4	17	8.4	1.6	4.1
472	12.9	21.3	10.3	9.4	17	8.4	1.6	4.1
473	12.9	21.3	10.3	9.4	17	8.4	1.6	4.1
474	13.2	21.3	10.3	9.4	17	8.1	1.6	3.8
475	13.3	21.3	10.3	9.4	17	8.0	1.6	3.7
476	13.4	21.3	10.3	9.4	17	7.9	1.6	3.6
477	13.2	21.3	10.3	9.4	17	8.1	1.6	3.8
478	13.3	25.5	9.6	14.3	17	12.2	1.6	3.7
479	12.9	25.2	9.3	14.3	17	12.3	1.6	4.1

NOTES:
* = VALUE BASED ON WATER LEVEL MEASURED ON 7/1/03. COLORADO RIVER FLOW, WAS 4,620 cfs ACCORDING TO THE USGS CISCO STATION ON 7/1/03.

DTW = DEPTH TO WATER
TD = TOTAL DEPTH
TOS = TOP OF SCREEN DEPTH
SL = SCREEN LENGTH
PID = PUMP INTAKE DEPTH
TST = TOTAL SATURATED THICKNESS
S = SUMP LENGTH
WAPI = WATER ABOVE PUMP INTAKE

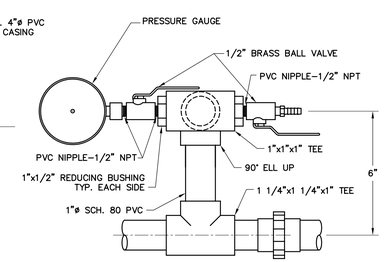

1 / 9 9 PRESSURE GAUGE DETAIL

N.T.S.

REVISION NO.	DATE	DESCRIPTION	DRAWN BY	CHECKED BY	PROJECT A/E	APPROVAL
1	7/31/03	WELL TABLE	JDB	MWM	MWM	JE

U.S. DEPARTMENT OF ENERGY
GRAND JUNCTION OFFICE
GRAND JUNCTION, COLORADO

Work Performed by
S. M. Stoller Corporation
Under DOE Contract
No. DE-AC13-02GJ79491

PROJECT LOCATION: MOAB, UTAH

REFERENCE

APPROVALS		
DRAWN BY: J. WHITNEY	4/28/03	
ENGINEER: M.W. MADRIL	4/28/03	
PROJECT ENGINEER: M.W. MADRIL	4/28/03	
APPROVED BY: J. ELMER	4/28/03	
PROJECT MANAGER: T. WRIGHT	4/28/03	
DOE CONCURRENCE		

MOAB PROJECT
GROUND WATER INTERIM ACTION REMEDIATION

WELL VAULT DETAILS

PROJECT NO. MOA-999-0006-06-006
DRAWING NO. X00357-R01-M02-D+
SHT. 9 OF 15

N:\MOA\999\0006\06\006\X00357\X0035701.DWG 08/01/03 11:15am J50191

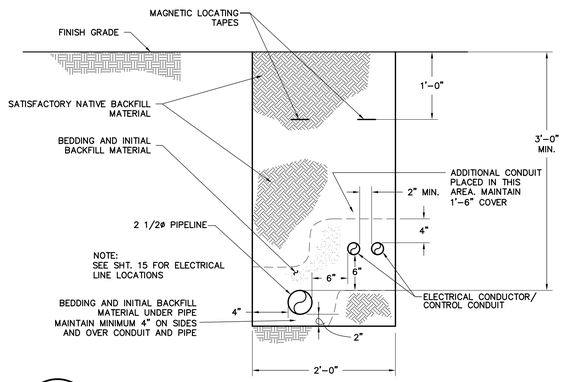

1 / 7 10 WELL FIELD PIPELINE TRENCH SECTION
1"=1'-0"

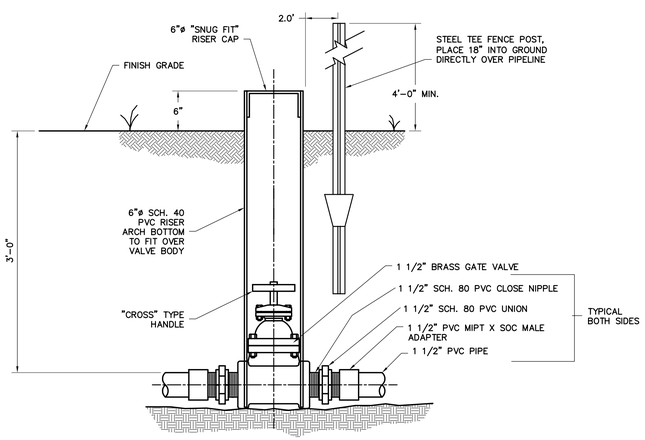

4 / 10 10 VALVE BOX DETAIL
NTS

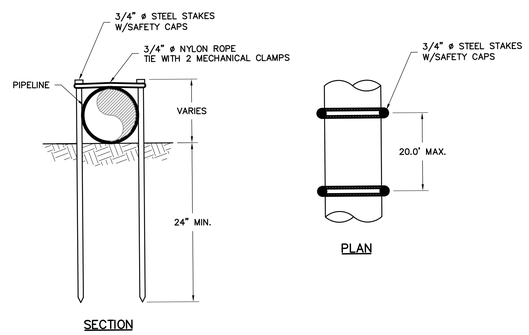

6 / 10 PIPE STAKE DETAIL
NTS

6,8,10,11

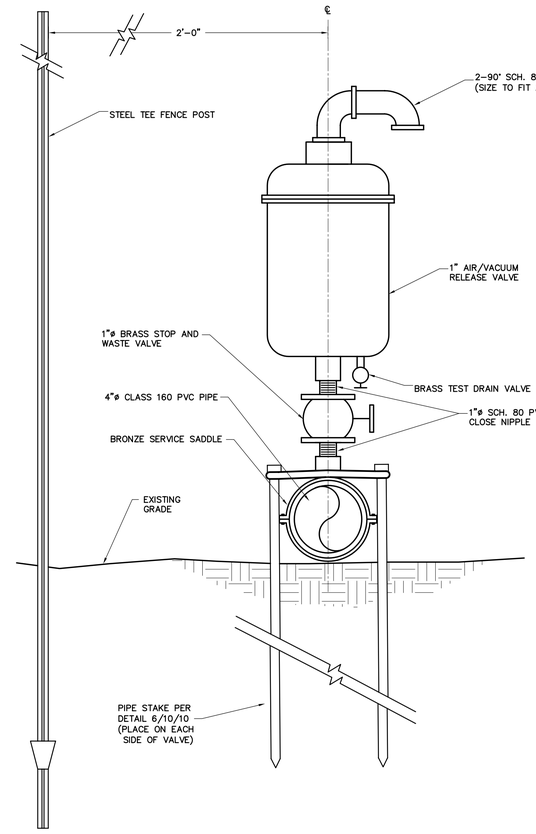

2 / 10 AIR/VACUUM RELEASE VALVE DETAIL
SCALE: 3"=1'-0"

6,7

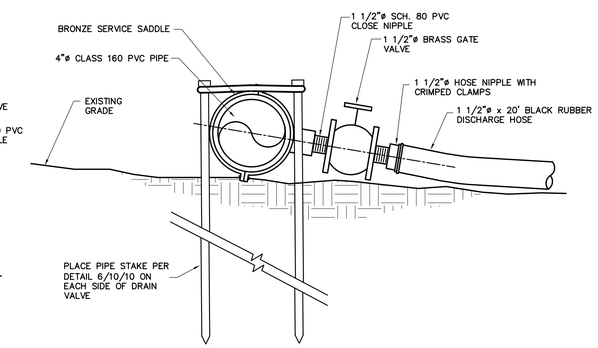

3 / 6 10 TOP OF GRADE PIPELINE DRAIN DETAIL
SCALE: 3"=1'-0"

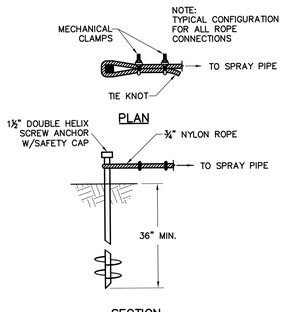

5 / 10 10 MOORING LINE TIE DETAIL
NTS

4,8

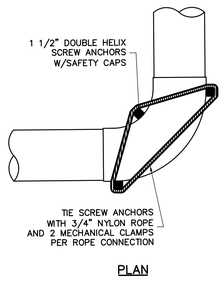

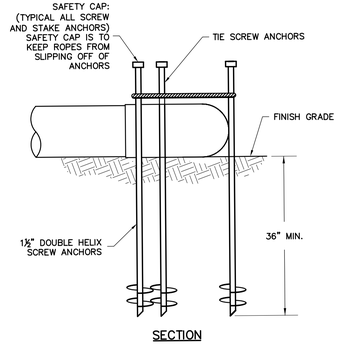

7 / 8 10 90° ELL PIPE STAKE DETAIL
NTS
(45° ELL SIMILAR)

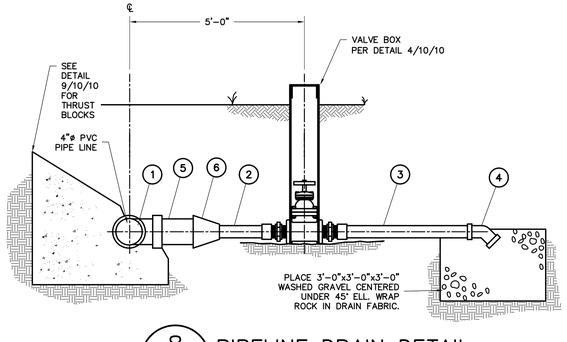

8 / 10 PIPELINE DRAIN DETAIL
NTS

6,7

DETAIL 8 – SCHEDULE	
ITEM	DESCRIPTION
1	4"x 4" x 4" TEE
2	1 1/2"ø SCH. 80 PVC (CUT TO FIT)
3	1 1/2"ø SCH. 80x5'-0" PVC
4	1 1/2"ø SCH. 80 PVC 45° ELL
5	4"ø x2'-0" SCH. 80 PVC
6	4"ø x 1 1/2"ø SCH. 80 PVC REDUCER

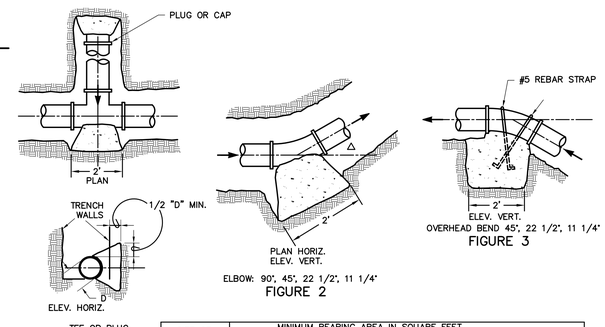

SIZE OF PIPE	MINIMUM BEARING AREA IN SQUARE FEET							
	FIGURE 1	FIGURE 2				FIGURE 3		
		90°	45°	22 1/2°	11 1/4°	45°	22 1/2°	11 1/4°
1 1/4"–2 1/2"	2	2	1	1	1	1.0	.5	.5

THRUST BLOCK NOTES
1. ALL BEARING SURFACES OF THRUST BLOCK SHALL BE AGAINST UNDISTURBED SOIL OR SOIL COMPACTED TO 95% MAX. DENSITY.
2. THRUST BLOCKS SHALL BE 4" MIN. THICKNESS; 3,000 PSI

9 / 10 10 THRUST BLOCK DETAIL
NTS

REVISION NO.	DATE	DESCRIPTION	DRAWN BY	CHECKED BY	PROJECT A/E	APPROVAL

U.S. DEPARTMENT OF ENERGY
GRAND JUNCTION OFFICE
GRAND JUNCTION, COLORADO

Work Performed by
S. M. Stoller Corporation
Under DOE Contract
No. DE-AC13-02GJ79491

PROJECT LOCATION: MOAB, UTAH

REFERENCE

APPROVALS		DATE
DRAWN BY:	J. WHITNEY	4/28/03
ENGINEER	M. MADRIL	4/28/03
PROJECT ENGINEER		
APPROVED BY:	J. ELMER	4/28/03
PROJECT MANAGER	T. WRIGHT	4/28/03
DOE CONCURRENCE		

MOAB PROJECT
GROUND WATER INTERIM ACTION REMEDIATION

MISCELLANEOUS PIPE DETAILS

PROJECT NO. MOA-999-0006-06-006
SHT. 10 OF 15
DRAWING NO. X00358-R00-M03-D+

N:\MOA\999\0006\06\006\X00358\X0035800.DWG 04/28/03 12:50pm WhitneyJ

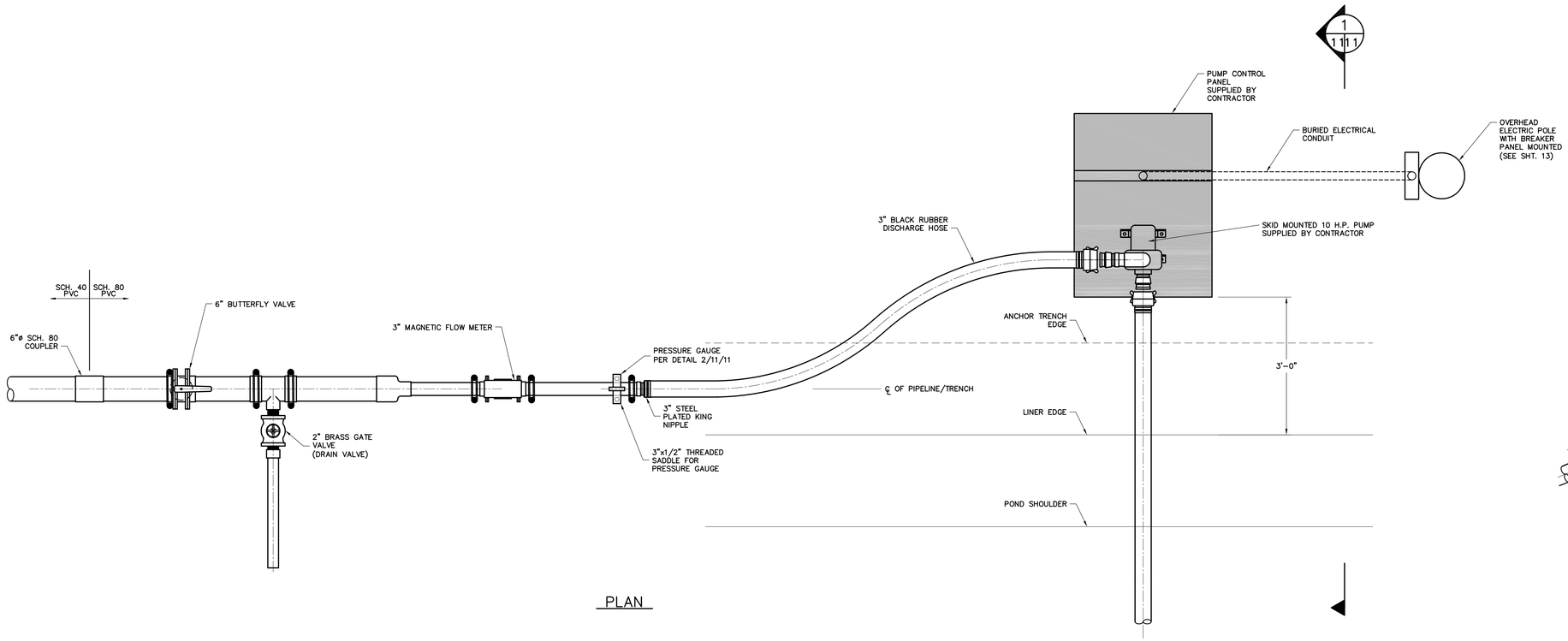

PLAN

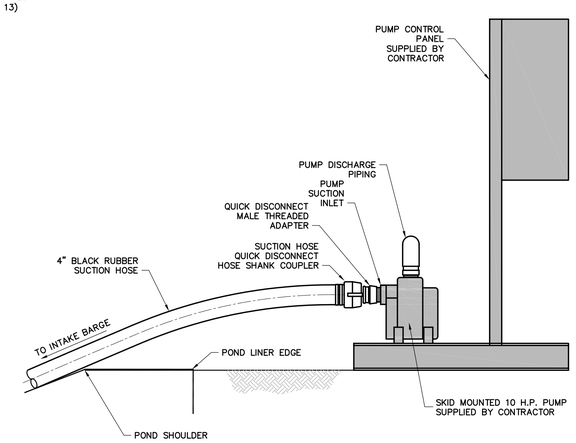

1 / 11 11 SECTION
SCALE: 1" = 1'-0"

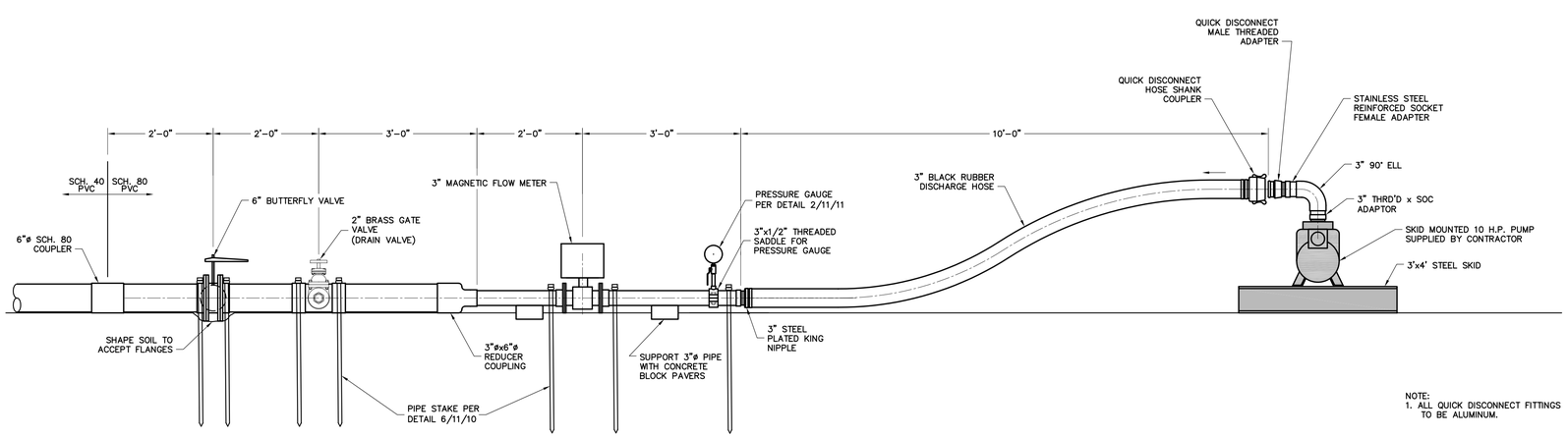

NOTE:
1. ALL QUICK DISCONNECT FITTINGS TO BE ALUMINUM.

PROFILE

PUMP STATION AND PIPING
SCALE: 3/4" = 1'-0"

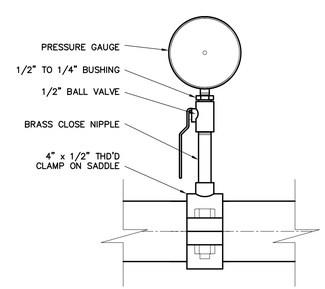

2 / 11 11 DETAIL
SCALE: 3" = 1'-0"

REVISION NO.	DATE	DESCRIPTION	DRAWN BY	CHECKED BY	PROJECT A/E	APPROVAL

U.S. DEPARTMENT OF ENERGY
GRAND JUNCTION OFFICE
GRAND JUNCTION, COLORADO

Work Performed by
S. M. Stoller Corporation
Under DOE Contract
No. DE-AC13-02GJ79491

PROJECT LOCATION: MOAB, UTAH

REFERENCE

APPROVALS		DATE
DRAWN BY:	J. WHITNEY	4/28/03
ENGINEER	M.W. MADRIL	4/28/03
PROJECT ENGINEER		
APPROVED BY:	J. ELMER	4/28/03
PROJECT MANAGER	T. WRIGHT	4/28/03
DOE CONCURRENCE		

MOAB PROJECT
GROUND WATER INTERIM ACTION REMEDIATION

EVAPORATION POND
PUMP PLAN/VIEWS

PROJECT NO. MOA-999-0006-06-006
DRAWING NO. X00359-R00-M04-D+
SHT. 11 OF 15

N:\MOA\999\0006\06\006\X00359\X0035900.DWG 04/28/03 1:51pm WhitneyJ

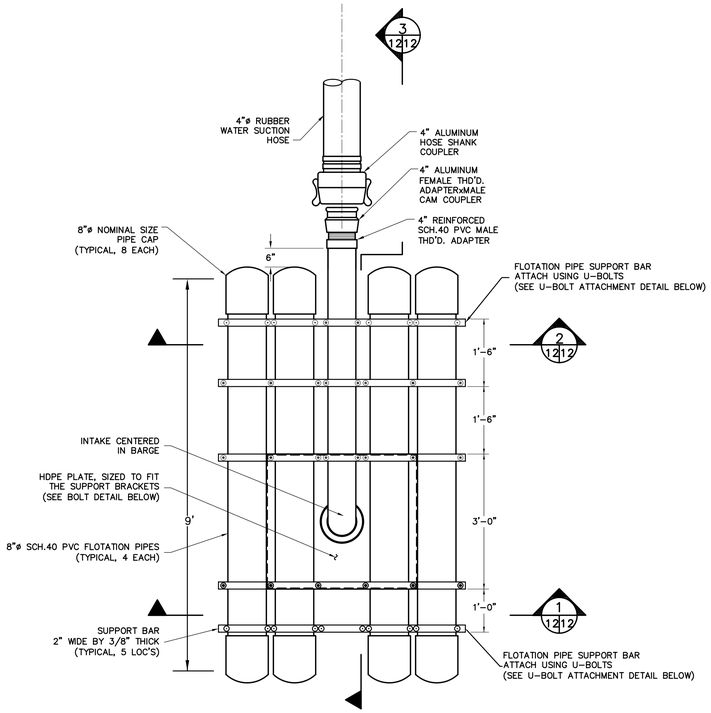

INTAKE BARGE PLAN

NTS

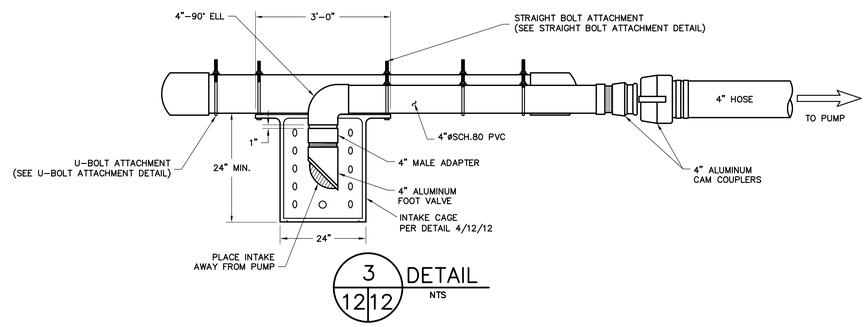

3/12|12 DETAIL

NTS

NOTES:
1. INTAKE CAGE IS TO BE CONSTRUCTED USING HDPE PIPE AND FLAT HDPE SHEET STOCK
2. INTAKE CAGE IS TO BE SHOP WELD FABRICATED ACCORDING TO THIS DETAIL

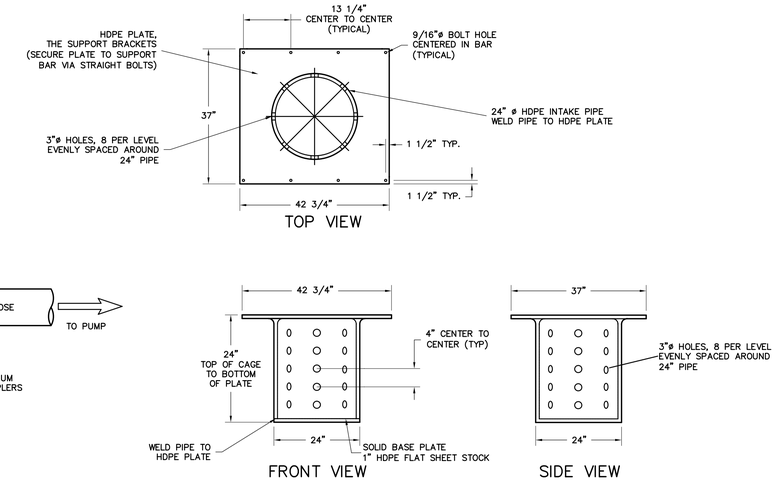

4/12|12 INTAKE CAGE DETAIL

NTS

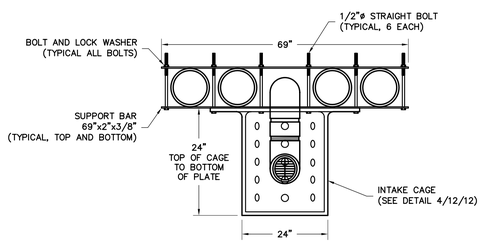

1/12|12 DETAIL – STRAIGHT BOLT ATTACHMENT

NTS

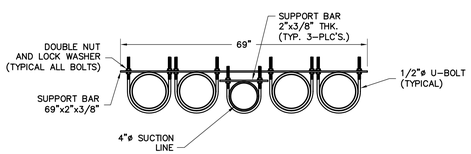

2/12|12 DETAIL – U-BOLT ATTACHMENT

NTS

NOTES:
1. ALL FLOTATION PIPE IS TO BE SCH.40 WITH A NOMINAL DIAMETER OF 8".
2. END CAPS ARE TO BE SOLVENT WELDED TO FLOTATION PIPE SECTIONS.
3. ALL SUPPORT BARS, BOLTS, NUTS AND WASHERS ARE TO BE MADE OF HOT DIPPED GALVANIZED STEEL.
4. SUPPORT BARS ARE TO BE CONSTRUCTED OUT OF 3/8"x2" STOCK.
5. INTAKE BELL IS TO BE A STANDARD REDUCER COUPLING WITH A 3/8" OR LESS STAINLESS STEEL SIEVE SCREEN ATTACHED TO THE OPENING WITH STAINLESS STEEL CLAMP.

REVISION NO.	DATE	DESCRIPTION	DRAWN BY	CHECKED BY	PROJECT A/E	APPROVAL

U.S. DEPARTMENT OF ENERGY
GRAND JUNCTION OFFICE
GRAND JUNCTION, COLORADO

Work Performed by
S. M. Stoller Corporation
Under DOE Contract
No. DE-AC13-02GJ79491

PROJECT LOCATION: MOAB, UTAH

REFERENCE

APPROVALS		DATE
DRAWN BY:	J. WHITNEY	4/28/03
ENGINEER	M. MADRIL	4/28/03
PROJECT ENGINEER		
APPROVED BY:	J. ELMER	4/28/03
PROJECT MANAGER	T. WRIGHT	4/28/03
DOE CONCURRENCE		

MOAB PROJECT
GROUND WATER INTERIM ACTION REMEDIATION

INTAKE BARGE DETAILS

PROJECT NO. MOA-999-0006-06-006
DRAWING NO. X00361-R00-M05-D+
SHT. 12 OF 15

N:\MOA\999\0006\06\006\X00361\X0036100.DWG 04/28/03 2:30pm WhitneyJ

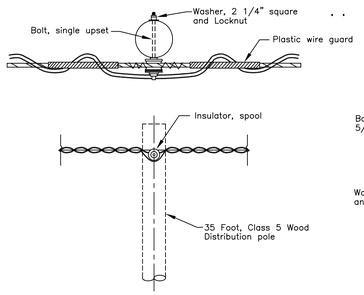

OVERHEAD SECONDARY IN-LINE ASSEMBLY
SCALE: NONE

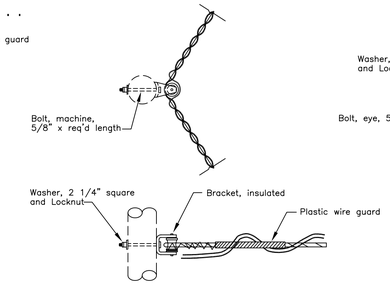

OVERHEAD SECONDARY ANGLE ASSEMBLY
SCALE: NONE

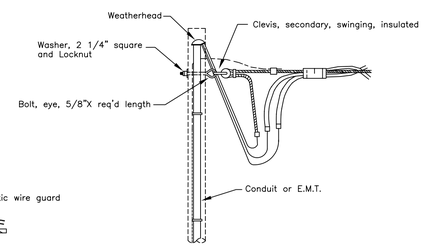

OVERHEAD SECONDARY DEAD-END ASSEMBLY
SCALE: NONE

NOTES

1. ALL CLEARANCES AND PROTECTIVE DEVICES TO BE IN CONFORMANCE TO THE MOST STRINGENT REQUIREMENTS OF EITHER THE NESC, NEC OR OTHER CODES OF GOVERNMENTAL OR REGULATING AUTHORITIES AS APPLICABLE.
2. GUY POLES AS REQUIRED.

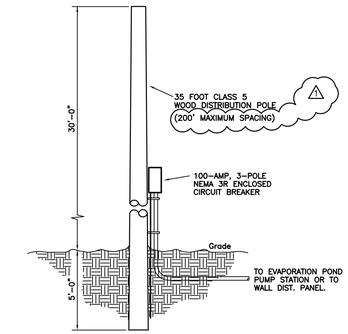

DISTRIBUTION POLE
SCALE: NONE

NOTE: CIRCUIT BREAKER TO BE MOUNTED AT DEAD-END SERVICE POLE FOR WELLS AND EVAPORATION POND PUMP STATION SERVICE DISCONNECT.

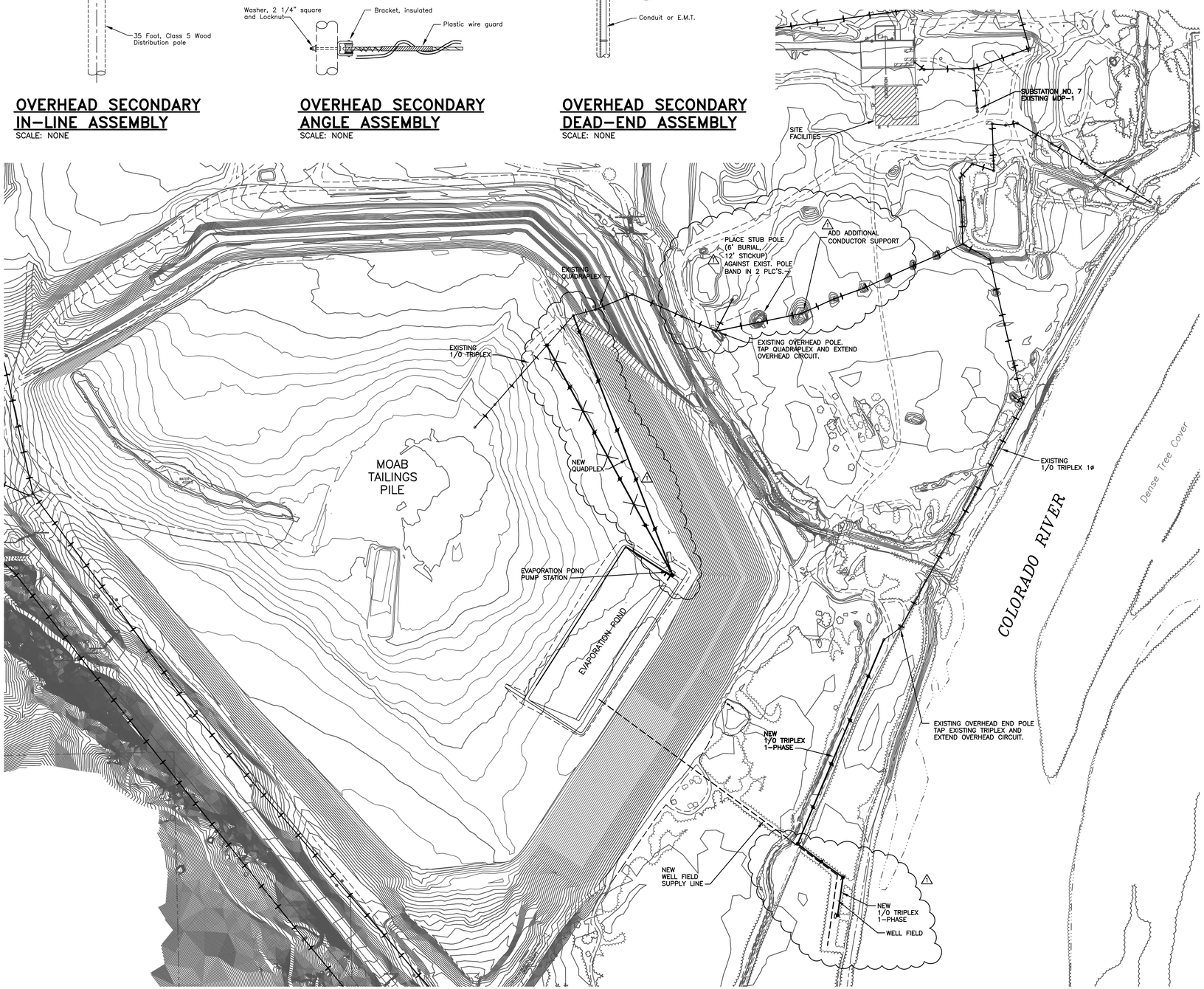

PARTIAL ELECTRICAL SITE PLAN
SCALE: 1" = 200'

north

ELECTRICAL LEGEND

- OVERHEAD DISTRIBUTION CONDUCTOR (QUAD OR TRIPLEX INDICATED)
  - EXISTING POWER POLE
  - NEW POWER POLE
- CONDUIT AND/OR CONDUCTOR CONCEALED IN FLOOR, SLAB, OR BELOW GRADE
- DUPLEX RECEPTACLE OUTLET (42")
  - GFI – GROUND FAULT INTERRUPTING
  - WP – WEATHERPROOF
- BRANCH CIRCUIT PANELBOARD– NEMA 1 ENCLOSURE UNLESS OTHERWISE NOTED. REFER TO PANEL SCHEDULE FOR SIZE & SPECIFICATION
- WELL MOTOR
- TRANSFORMER
- FULL VOLTAGE NON-REVERSING MOTOR STARTER
- (2) POWER CABLE DESIGNATION (SEE SCHEDULE)
- (3) ELECTRICAL FLAG NOTE

REVISION NO.	DATE	DESCRIPTION	DRAWN BY	CHECKED BY	PROJECT A/E	APPROVAL
1	5/12/03	ADDENDUM NO. 1	CJW	MWM	MWM	JE

U.S. DEPARTMENT OF ENERGY
GRAND JUNCTION OFFICE
GRAND JUNCTION, COLORADO

Work Performed by
S. M. Stoller Corporation
Under DOE Contract
No. DE-AC13-02GJ79491

PROJECT LOCATION: MOAB, UTAH

REFERENCE: ESC ELECTRICAL SYSTEMS CONSULTANTS
ELECTRICAL CONSULTING ENGINEERS
FORT COLLINS COLORADO
(970) 224-9100

APPROVALS		DATE
DRAWN BY:	R. MOLANDER	4/28/03
ENGINEER	M. WELENC	4/28/03
PROJECT ENGINEER	M. MADRIL	4/28/03
APPROVED BY:	J. ELMER	4/28/03
PROJECT MANAGER	T. WRIGHT	4/28/03
DOE CONCURRENCE		

MOAB PROJECT
GROUND WATER INTERIM ACTION REMEDIATION

ELECTRICAL SITE PLAN AND LEGEND

PROJECT NO. MOA-999-0006-06-006
DRAWING NO. X00362-R01-E01-D+
SHT. 13 OF 15

203-383 (X00362AA)

N:\MOA\999\0006\06\006\X00362\X0036201.DWG 05/12/03 09:16am WhitneyJ

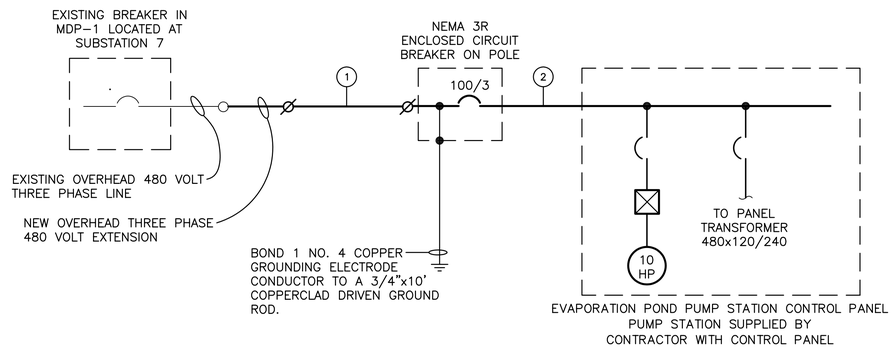

CONDUCTOR SCHEDULE

1. 4-#4/0 QUAD PLEX
2. (3-No. 3 THWN CU & 1-No. 8 GC) 1"C.

PUMP STATION ELECTRICAL ONE LINE DIAGRAM

SERVICE CHARACTERISTICS: 480/277 VOLT, 3-PHASE, 4-WIRE GROUNDED WYE

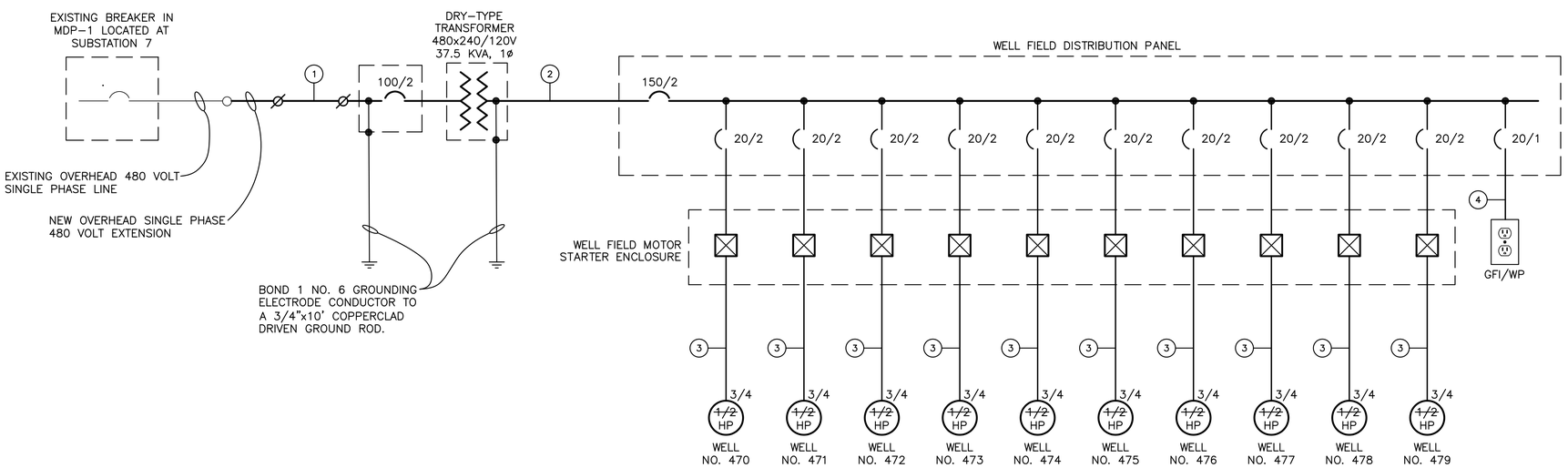

CONDUCTOR SCHEDULE

1. 3-#1/0 TRIPLEX
2. (3-No. 2 THWN CU & 1-No. 6 GC) 1 1/2"C.
3. (2-No. 10 THWN CU & 1-No. 12 GC) 3/4"C.
4. (2-No. 12 THWN CU & 1-No. 12 GC) 1/2"C.

WELL FIELD ELECTRICAL ONE LINE DIAGRAM

SERVICE CHARACTERISTICS: 120/240 VOLT, 1-PHASE, 3-WIRE

REVISION NO.	DATE	DESCRIPTION	DRAWN BY	CHECKED BY	PROJECT A/E	APPROVAL
1	5/12/03	ADDENDUM NO. 1	CJW	MWM	MWM	JE

U.S. DEPARTMENT OF ENERGY
GRAND JUNCTION OFFICE
GRAND JUNCTION, COLORADO

Work Performed by
S. M. Stoller Corporation
Under DOE Contract
No. DE-AC13-02GJ79491

PROJECT LOCATION: MOAB, UTAH

REFERENCE: ESC ELECTRICAL SYSTEMS CONSULTANTS
ELECTRICAL CONSULTING ENGINEERS
FORT COLLINS COLORADO
(970) 224-9100

APPROVALS		DATE
DRAWN BY:	R. MOLANDER	4/28/03
ENGINEER	M. WELENC	4/28/03
PROJECT ENGINEER	M. MADRIL	4/28/03
APPROVED BY:	J. ELMER	4/28/03
PROJECT MANAGER	T. WRIGHT	4/28/03
DOE CONCURRENCE		

MOAB PROJECT
GROUND WATER INTERIM ACTION REMEDIATION

ELECTRICAL ONE-LINE DIAGRAM

PROJECT NO. MOA-999-0006-06-006
DRAWING NO. X00363-R01-E02-D+
SHT. 14 OF 15

203-383 (X00363AA)

N:\MOA\999\0006\06\006\X00363\X0036301.DWG 05/08/03 3:37pm WhitneyJ

PANEL SCHEDULE

CIRCUIT NUMBER	BREAKER TRIP	LOAD DESCRIPTION	LOAD WATTS	PHASE	LOAD WATTS	LOAD DESCRIPTION	BREAKER TRIP	CIRCUIT NUMBER
1	20/2	WELL NO. 475	414	A	414	WELL NO. 474	20/2	2
3			414	B	414			4
5	20/2	WELL NO. 476	414	A	414	WELL NO. 473	20/2	6
7			414	B	414			8
9	20/2	WELL NO. 477	414	A	414	WELL NO. 472	20/2	10
11			414	B	414			12
13	20/2	WELL NO. 478	414	A	414	WELL NO. 471	20/2	14
15			414	B	414			16
17	20/2	WELL NO. 479	414	A	414	WELL NO. 470	20/2	18
19			414	B	414			20
21	20	SPARE	.	A	200	GFI RECEPTACLE	20	22
23	20	SPARE	.	B	.	SPARE	20	24
25		SPACE		A		SPACE		26
27		SPACE		B		SPACE		28
29		SPACE		A		SPACE		30

MFGR.	SQUARE-D or EQUAL
TYPE	NQOD
VOLT/PHASE	120/240 VOLT 1-PHASE
WIRE	3-WIRE W/GRND

LOAD	A	.
	B	.
	C	.
	TOTAL	.

MAIN	100
MLO	–
BUS	100
MOUNTING	ENCLOSURE NEMA 3R

NAMEPLATE SCHEDULE

ITEM	DESCRIPTION
NP1	WELL NO. 479
NP2	WELL NO. 478
NP3	WELL NO. 477
NP4	WELL NO. 476
NP5	WELL NO. 475
NP6	WELL NO. 474
NP7	WELL NO. 473
NP8	WELL NO. 472
NP9	WELL NO. 471
NP10	WELL NO. 470

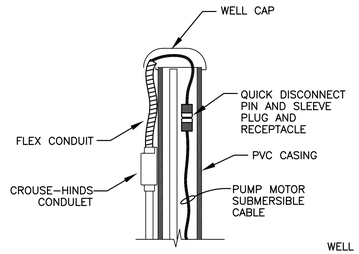

INTERIOR DETAIL
NO SCALE

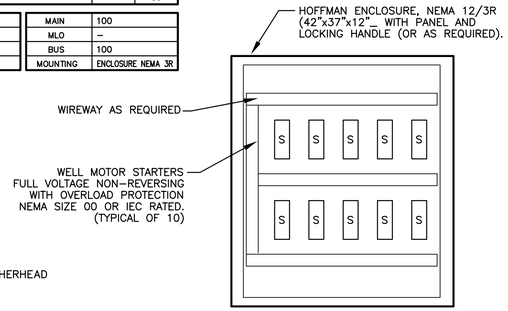

INTERIOR VIEW

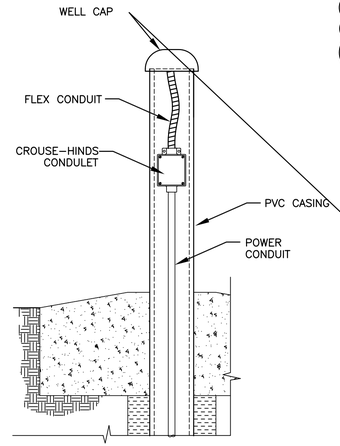

CONDULET DETAIL
NO SCALE

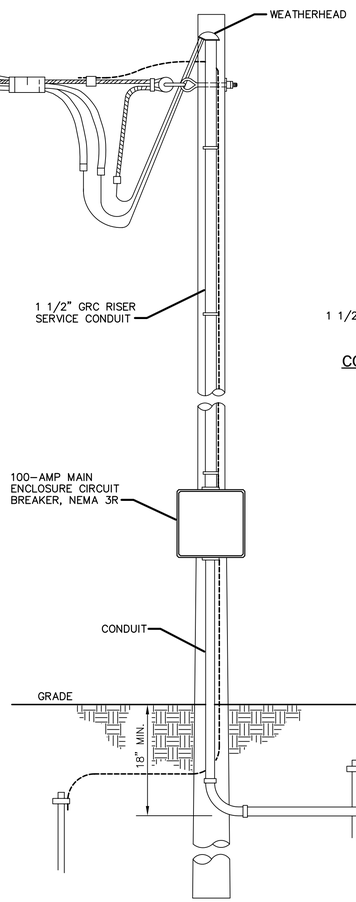

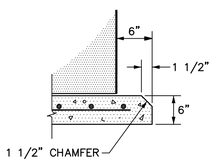

CONCRETE PAD DETAIL
NO SCALE

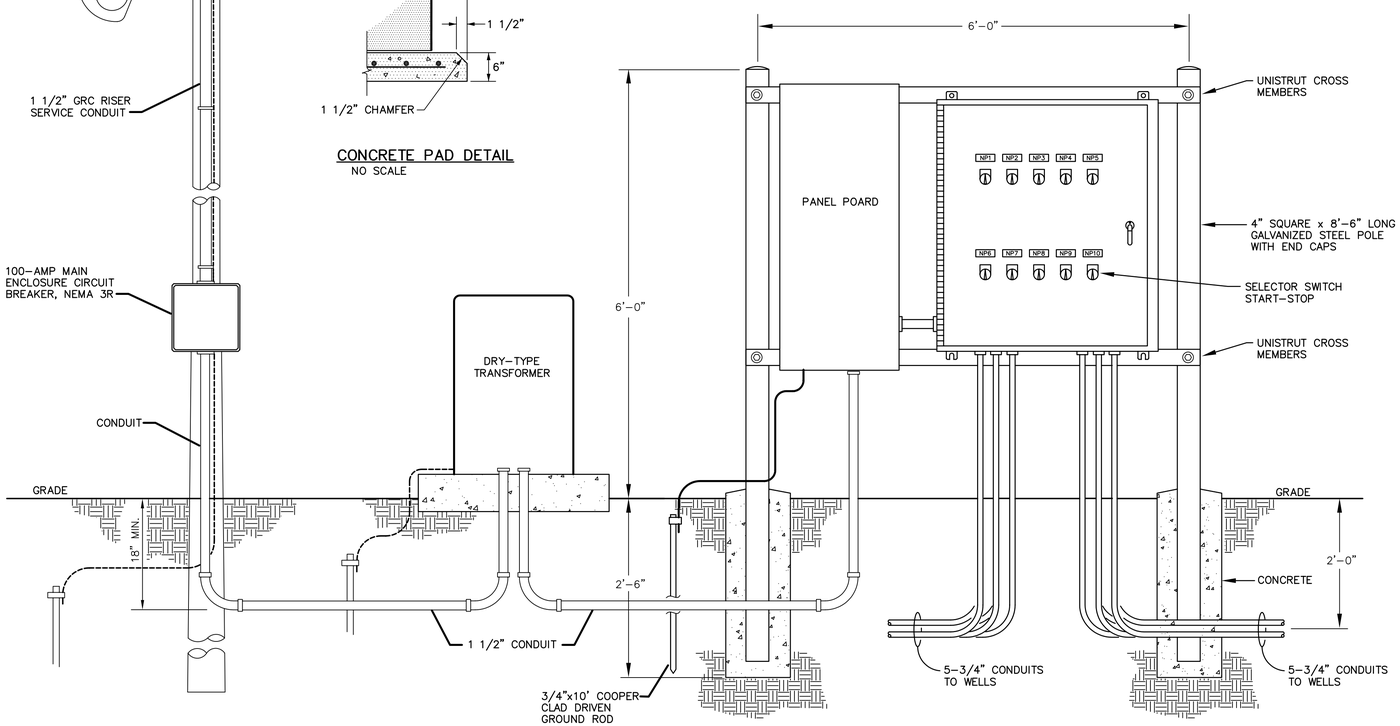

EXTERIOR VIEW

WELL FIELD ELECTRICAL ENCLOSURE ELEVATION
SCALE: 1" = 1'-0"

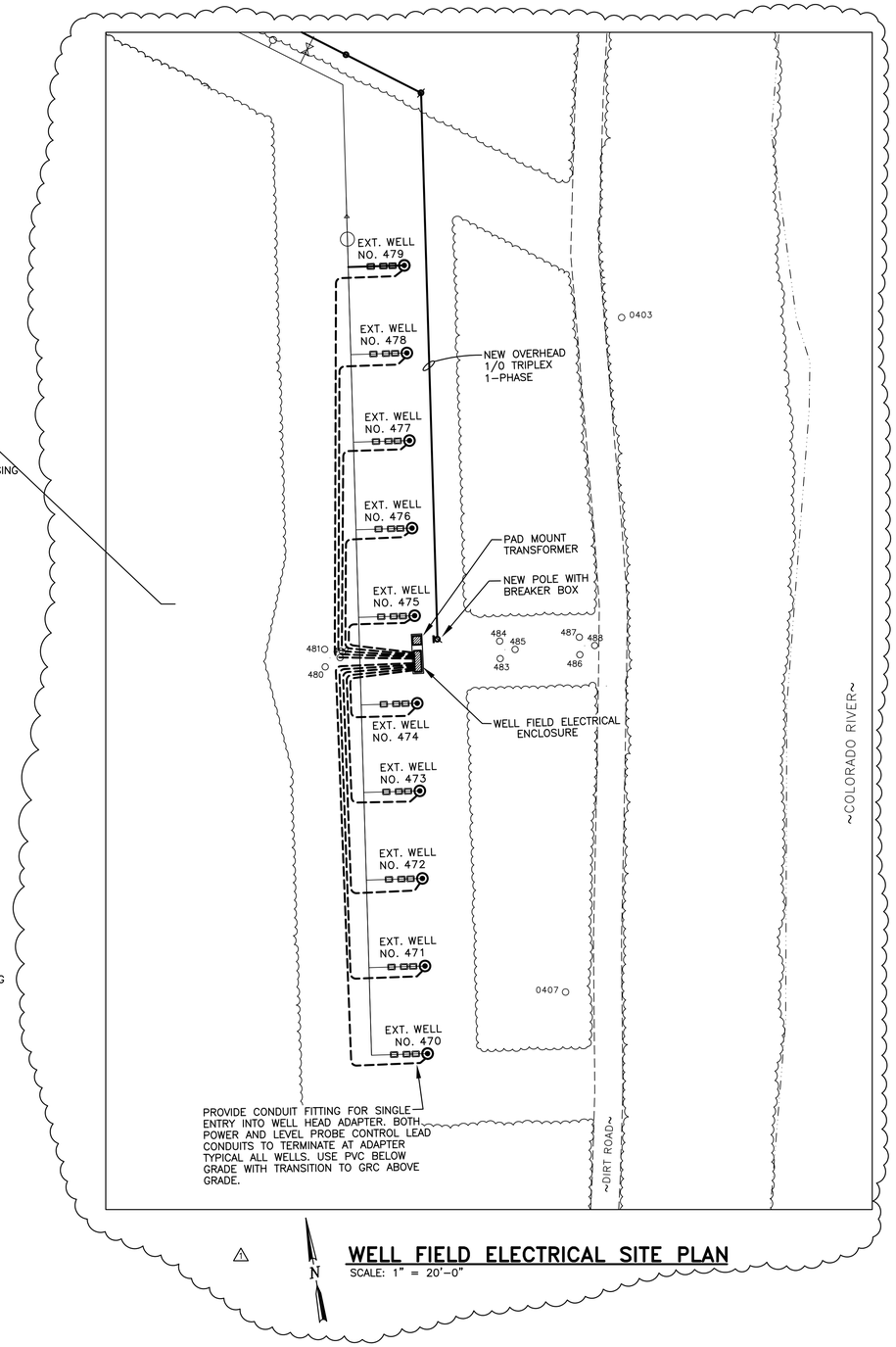

WELL FIELD ELECTRICAL SITE PLAN
SCALE: 1" = 20'-0"

REVISION NO.	DATE	DESCRIPTION	DRAWN BY	CHECKED BY	PROJECT A/E	APPROVAL
1	5/14/03	WELLFIELD RELOCATION	CJW	MWM	MWM	JE

U.S. DEPARTMENT OF ENERGY
GRAND JUNCTION OFFICE
GRAND JUNCTION, COLORADO

Work Performed by
S. M. Stoller Corporation
Under DOE Contract
No. DE-AC13-02GJ79491

PROJECT LOCATION: MOAB, UTAH

REFERENCE: ESC ELECTRICAL SYSTEMS CONSULTANTS
ELECTRICAL CONSULTING ENGINEERS
FORT COLLINS COLORADO
(970) 224-9100

APPROVALS		DATE
DRAWN BY:	R. MOLANDER	4/28/03
ENGINEER	M. WELENC	4/28/03
PROJECT ENGINEER	M. MADRIL	4/28/03
APPROVED BY	J. ELMER	4/28/03
PROJECT MANAGER	T. WRIGHT	4/28/03
DOE CONCURRENCE		

MOAB PROJECT
GROUND WATER INTERIM ACTION REMEDIATION

WELL FIELD
ELECTRICAL PLANS & DETAILS

PROJECT NO. MOA-999-0006-06-006
DRAWING NO. X00365-R01-E03-D+
SHT. 15 OF 15

203-383 (X00365AA)

N:\MOA\999\0006\06\006\X00365\X0036501.DWG 06/09/03 2:02pm Whitneyj

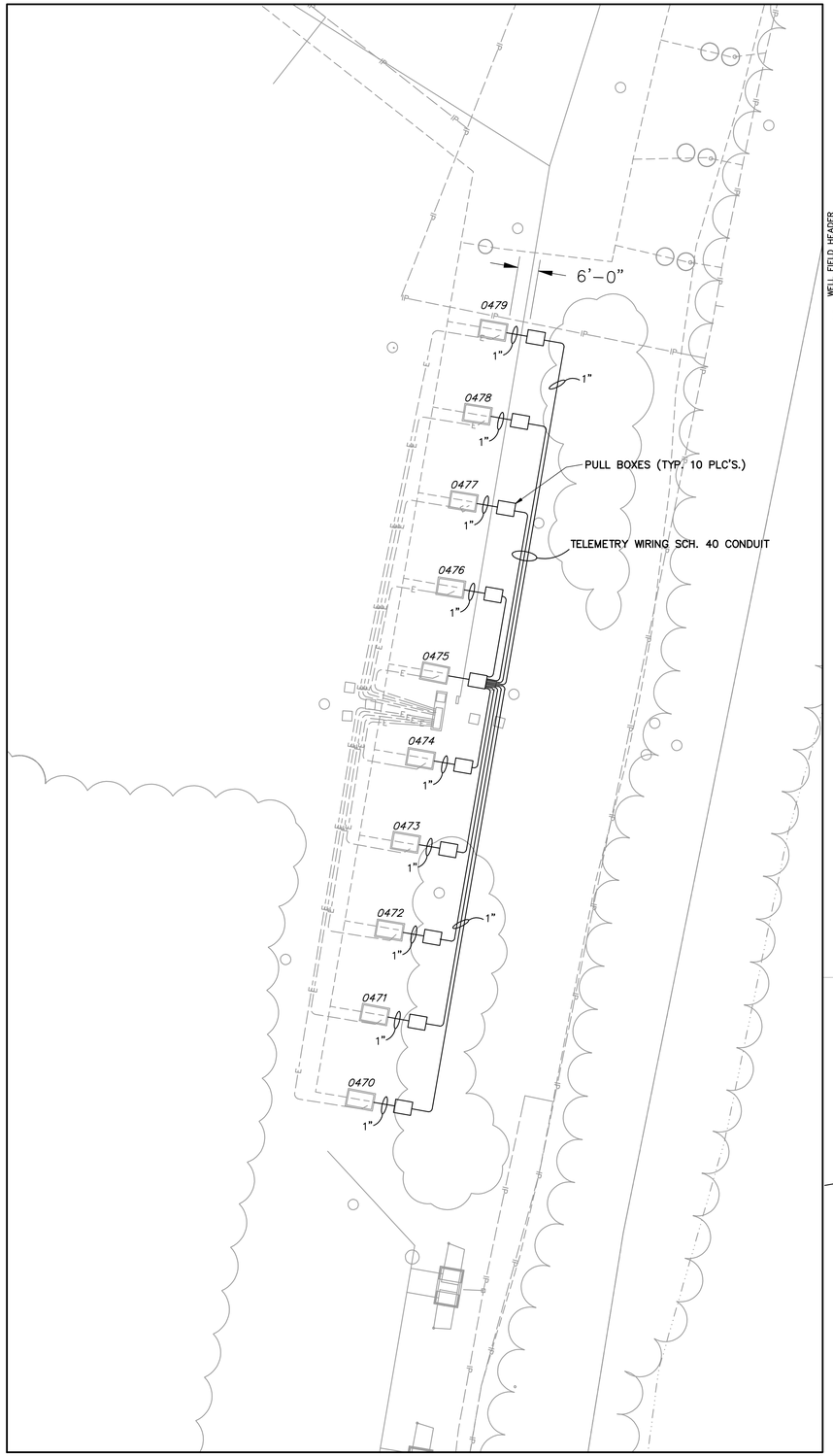

WELL FIELD PLAN

SCALE: 1"=20'-0"

N

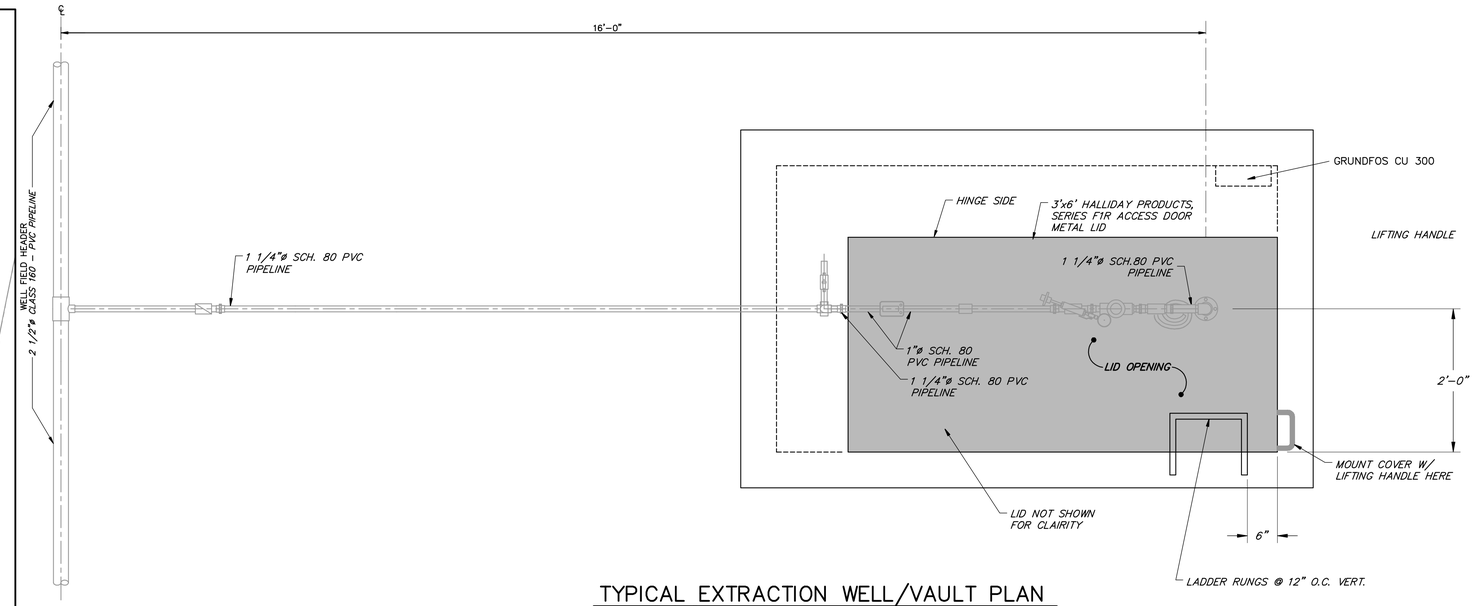

TYPICAL EXTRACTION WELL/VAULT PLAN

HORZ. 1"=1'-0"

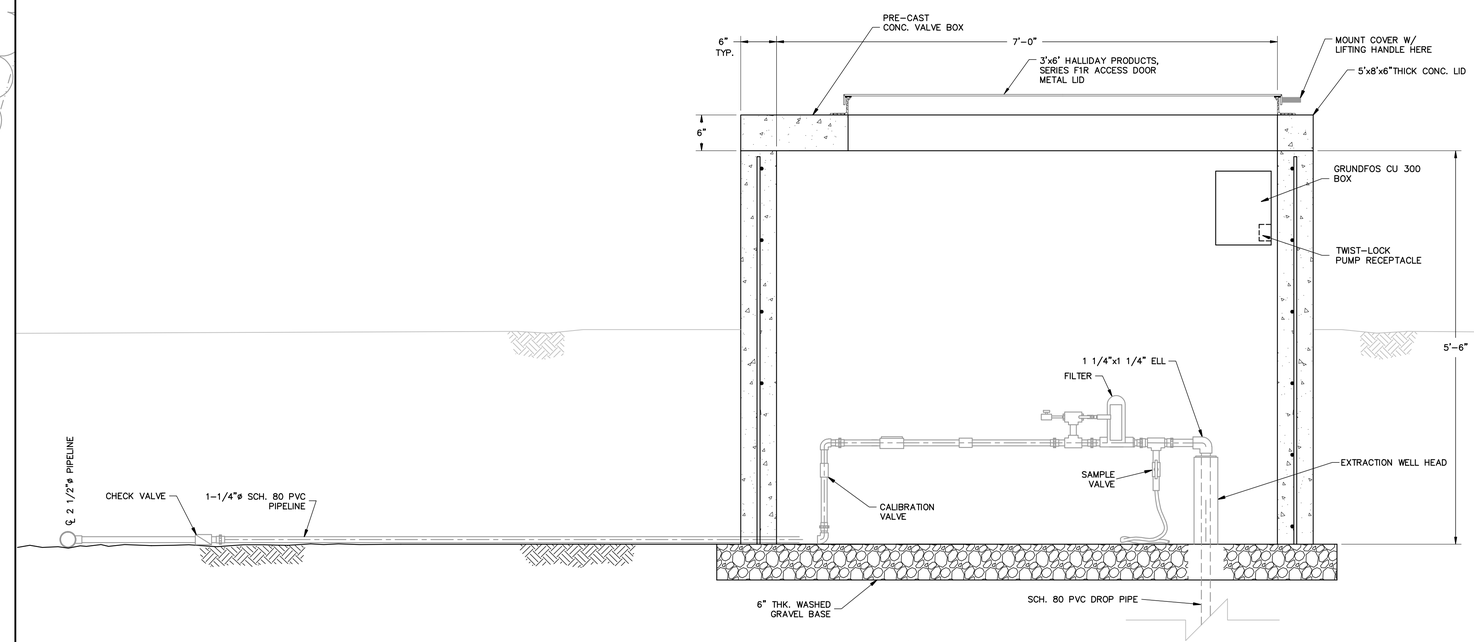

TYPICAL EXTRACTION WELL/VAULT PROFILE

HORZ. 1"=1'-0"

REVISION NO.	DATE	DESCRIPTION	DRAWN BY	CHECKED BY	PROJECT A/E	APPROVAL

U.S. DEPARTMENT OF ENERGY
GRAND JUNCTION, COLORADO

Work Performed by
S.M. Stoller Corporation
Under DOE Contract
No. DE-AC01-02GJ79491

PROJECT LOCATION: MOAB PROJECT SITE, MOAB, UTAH

REFERENCE

APPROVALS		DATE
DRAWN BY:	J WHITNEY	2/28/07
ENGINEER		
PROJECT ENGINEER		
APPROVED BY:		
PROJECT MANAGER		
DOE CONCURRENCE	(SEE RECORDS)	

GROUND WATER INTERIM ACTION
CONFIGURATION 1 TELEMETRY INSTALLATION

CONDUIT ROUTING PLAN

PROJECT NO. MOA-999-0006-07-003
DRAWING NO. X02124-R00-F01-D+
SHT. 1 OF 1

N:\MOA\999\0006\07\003\X02124\X0212400.DWG 03/08/07 4:09pm Whitneyj

Attachment 2

UNITED STATES DEPARTMENT OF ENERGY

MOAB PROJECT

GROUND WATER INTERIM ACTION EXPANSION MOAB PROJECT, SITE

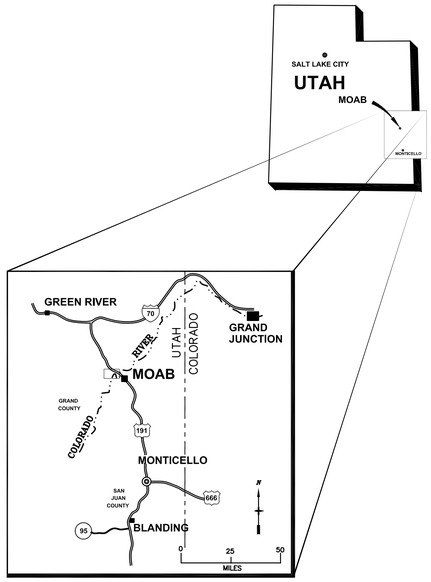

INDEX OF DRAWINGS

SHEET	TITLE	DRAWING NO.
1	TITLE SHEET	X00703–R00–T01–D+
2	PROJECT SITE PLAN	X00704–R00–F01–D+
3	WELL FIELD PLAN AND DETAILS	X00705–R00–C01–D+
4	RAW WATER POND PUMP PLAN AND DETAILS	X00706–R00–M01–D+
5	RAW WATER TRANSMISSION LINE–PLAN & PROFILE	X00707–R00–P01–D+
6	RAW WATER TRANSMISSION LINE–PLAN & PROFILE	X00708–R00–P02–D+
7	WELL VAULT DETAILS	X00710–R00–M02–D+
8	MISCELLANEOUS PIPE DETAILS	X00711–R00–M03–D+
9	ELECTRICAL SITE PLAN AND LEGEND	X00819–R00–E01–D+
10	WELL FIELD ELECTRICAL PLAN AND DETAILS	X00712–R00–E02–D+
11	WELL FIELD ELECTRICAL WELL VAULT DETAILS	X00818–R00–E03–D+
12	WELL FIELD ELECTRICAL ONE–LINE DIAGRAM	X00817–R00–E04–D+

ABBREVIATIONS

APPROX.	APPROXIMATE
BOTT.	BOTTOM
℄	CENTER LINE
CLR	CLEAR
CONC.	CONCRETE
CONT.	CONTINUATION
CORP.	CORPORATION
CSP	CORRUGATED STEEL PIPE
DIA. OR Ø	DIAMETER
EA.	EACH
DOE	DEPARTMENT OF ENERGY
E	EASTING
ELL	ELBOW
EL. OR ELEV.	ELEVATION
EQUA	EQUATION
EXIST	EXISTING
FH	FIRE HYDRANT
FLG	FLANGE
F.P.	FLOOD PLAIN
GA	GAUGE
GALV.	GALVANIZED
GPM	GALLONS PER MINUTE
G.I.P.	GALVANIZED IRON PIPE
HORIZ.	HORIZONTAL
INV	INVERT
MAX.	MAXIMUM
MH	MANHOLE
MIN.	MINIMUM
MW	MONITORING WELL
N	NORTHING
NA	NOT APPLICABLE
NO.	NUMBER
NOM	NOMINAL
N.I.C.	NOT IN CONTRACT
NPT	NATIONAL PIPE THREAD
NTS	NOT TO SCALE
OC	ON CENTER
OD	OUTSIDE DIAMETER
P.C.	POINT OF CURVATURE
PIP	PLASTIC IRRIGATION PIPE
P.I.	POINT OF INTERSECTION
P.O.B.	POINT OF BEGINNING
P.T.	POINT OF TANGENCY
PLC'S.	PLACES
PVC	POLYVINYL CHLORIDE
P.V.I.	POINT OF VERTICAL INTERSECTION
ROW	RIGHT–OF–WAY
SCH	SCHEDULE
SHT	SHEET
STA.	STATION
THK.	THICK
TP	TURNING POINT
TYP	TYPICAL
UDOT	UTAH DEPARTMENT OF TRANSPORTATION
UG	UNDERGROUND
UMTRA	URANIUM MILL TAILINGS REMEDIAL ACTION
VERT.	VERTICAL
V.P.I.	VERTICAL POINT OF INTERSECTION
WV	WATER VALVE

PLAN VIEW

- BOUNDARY OF WORK
- BURIED TELEPHONE/OPTICAL/ ELECTRICAL/GAS LINES
- RAILROAD TRACK
- WIRE FENCE
- CHAIN LINK FENCE
- DRAINAGE DITCH
- EXISTING ASPHALT ROAD/PARKING LOT
- EXISTING UNIMPROVED DIRT ROAD
- GRADE BREAK LINES
- OVERHEAD ELECTRICAL LINE
- TREES/SHRUBS/BRUSH
- UTILITY POLE
- UNDERGROUND DRAINAGE CULVERT
- XXXX EXISTING MONITORING WELL
- SLOPE/FLOW ARROW
- TOP OF SLOPE
- SURVEY CONTROL POINT
- 6 DEPTH OF CONTAMINATION

WELL LEGEND

- △ BOREHOLE VIBRATING WIRE PIZOMETER
- ● WELL VIBRATING WIRE PIZOMETER
- □ WELL PIZOMETER
- ○ WELL MONITORING/PUMPING

SECTION

- COMMON BORROW
- COMPACTED SOIL
- UNDISTURBED SOIL
- ROAD BASE
- CONCRETE
- SAND OR BEDDING MATERIAL
- GRAVEL OR DRAIN ROCK

DETAIL SYMBOL

1 — DETAIL NUMBER/SECTION LETTER

2 — SHEET ON WHICH DETAIL/SECTION IS TAKEN FROM

3 — SHEET ON WHICH DETAIL/SECTION IS DRAWN

DRAWING LEGEND

- CONTAMINATED MATERIAL
- 5210 EXISTING CONTOUR
- 5210 NEW CONTOUR
- BUILDING/STRUCTURE
- EXISTING ASPHALT SURFACE

REVISION NO.	DATE	DESCRIPTION	DRAWN BY	CHECKED BY	PROJECT A/E	APPROVAL

U.S. DEPARTMENT OF ENERGY
GRAND JUNCTION, COLORADO

Work Performed by
S.M. Stoller Corporation
Under DOE Contract
No. DE–AC01–02GJ79491

PROJECT LOCATION: MOAB, UTAH

REFERENCE

APPROVALS		
DRAWN BY: J. WHITNEY	DATE: 7/29/04	
ENGINEER: G. SMITH	7/29/04	
PROJECT ENGINEER: G. SMITH	7/29/04	
APPROVED BY: M. MADRIL	7/29/04	
PROJECT MANAGER: T. WRIGHT	7/29/04	
DOE CONCURRENCE		

MOAB PROJECT
GROUND WATER INTERIM ACTION EXPANSION

TITLE SHEET

PROJECT NO. MOA–999–0006–06–008
DRAWING NO. X00703–R00–T01–D+
SHT. 1 OF 12

N:\MOA\999\0006\06\008\X00703\X0070300.DWG 07/30/04 11:16am J50191

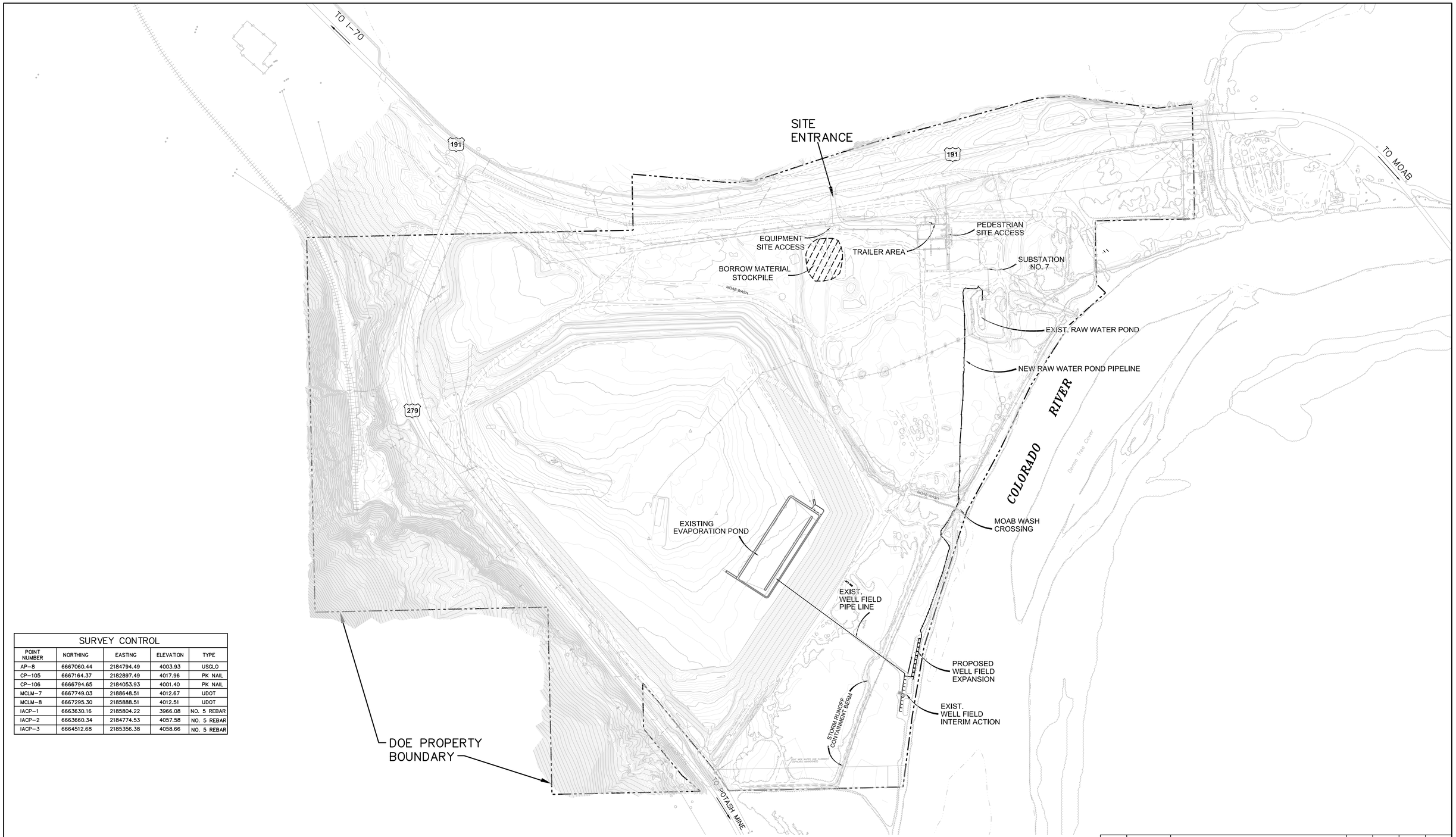

SURVEY CONTROL				
POINT NUMBER	NORTHING	EASTING	ELEVATION	TYPE
AP-8	6667060.44	2184794.49	4003.93	USGLO
CP-105	6667164.37	2182897.49	4017.96	PK NAIL
CP-106	6666794.65	2184053.93	4001.40	PK NAIL
MCLM-7	6667749.03	2188648.51	4012.67	UDOT
MCLM-8	6667295.30	2185888.51	4012.51	UDOT
IACP-1	6663630.16	2185804.22	3966.08	NO. 5 REBAR
IACP-2	6663660.34	2184774.53	4057.58	NO. 5 REBAR
IACP-3	6664512.68	2185356.38	4058.66	NO. 5 REBAR

N

MOAB SITE PLAN

SCALE IN FEET

300 150 0 300 600 900

CONTOUR INTERVAL = 10 FEET

THIS DRAWING IS FOR THE SOLE USE OF THE U.S. DEPARTMENT OF ENERGY AND ITS CONTRACTORS. IT IS NOT A LAND SURVEY PLAT, UTILITY LOCATION PLAT, OR OTHER IMPROVEMENT SURVEY PLAT AND IS NOT TO BE RELIED UPON FOR THE ESTABLISHMENT OF FENCE, BUILDING, OR OTHER FUTURE IMPROVEMENT LINES.

REVISION NO.	DATE	DESCRIPTION	DRAWN BY	CHECKED BY	PROJECT A/E	APPROVAL

U.S. DEPARTMENT OF ENERGY
GRAND JUNCTION, COLORADO

Work Performed by
S.M. Stoller Corporation
Under DOE Contract
No. DE-AC01-02GJ79491

PROJECT LOCATION: MOAB, UTAH

REFERENCE

APPROVALS		DATE
DRAWN BY:	J. WHITNEY	7/29/04
ENGINEER:	G. SMITH	7/29/04
PROJECT ENGINEER:	G. SMITH	7/29/04
APPROVED BY:	M. MADRIL	7/29/04
PROJECT MANAGER:	T. WRIGHT	7/29/04
DOE CONCURRENCE:		

MOAB PROJECT
GROUND WATER INTERIM ACTION EXPANSION

PROJECT SITE PLAN

PROJECT NO. MOA-999-0006-06-008

DRAWING NO. X00704-R00-F01-D+

SHT. 2 OF 12

N:\MOA\999\0006\06\008\X00704\X0070400.DWG 07/30/04 11:18am J50191

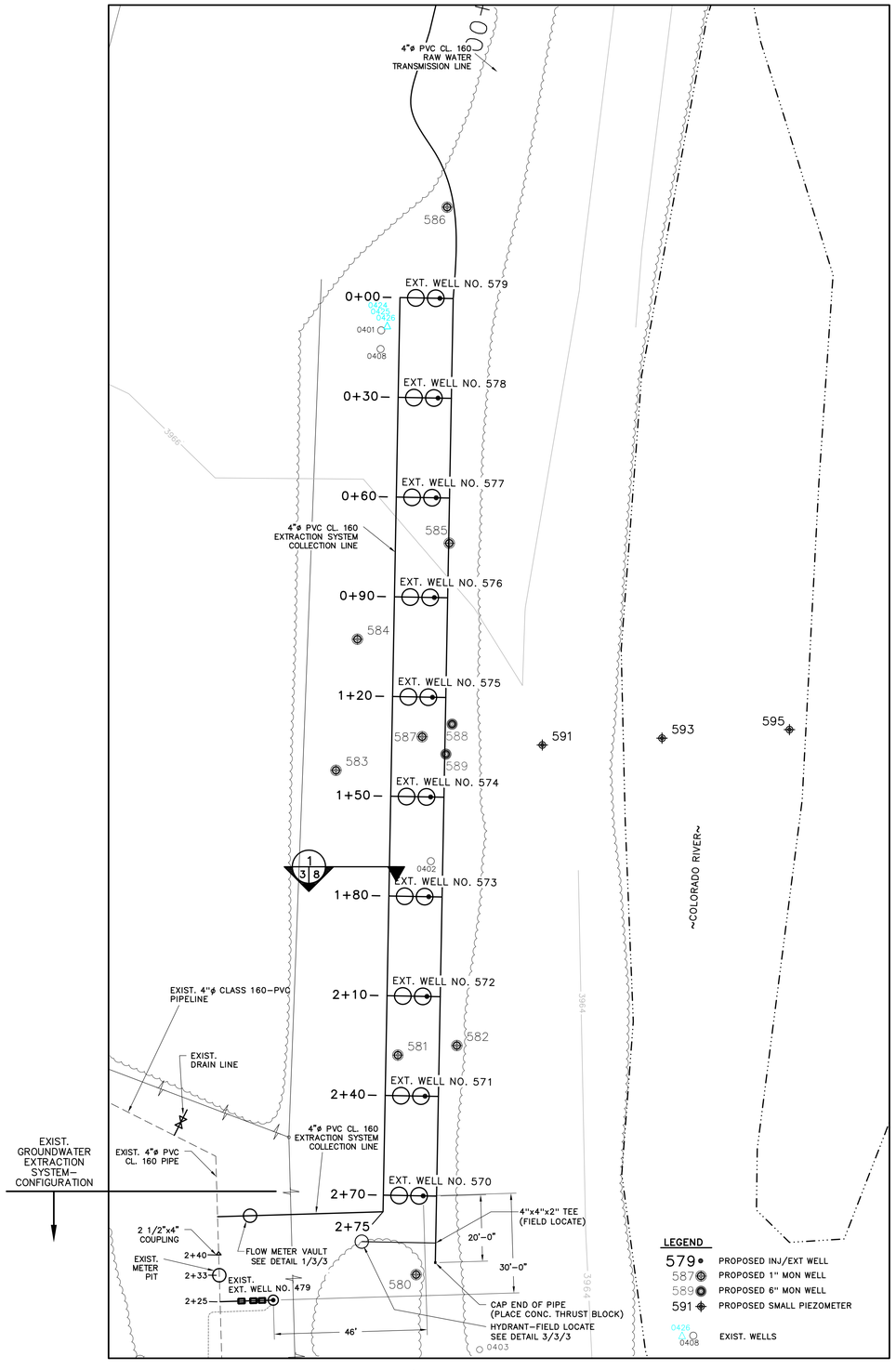

WELL FIELD PLAN
SCALE: 1":=20'-0"

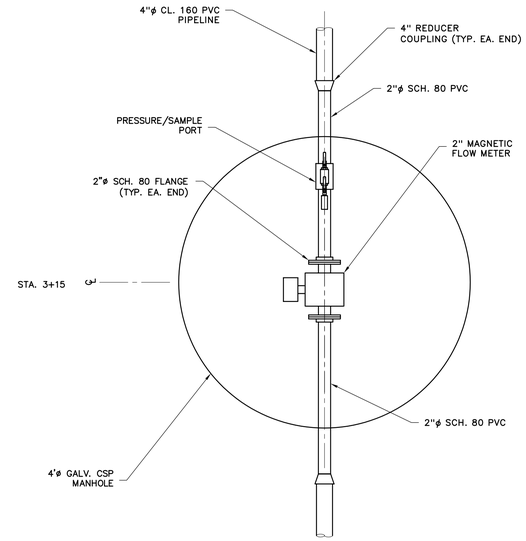

PLAN

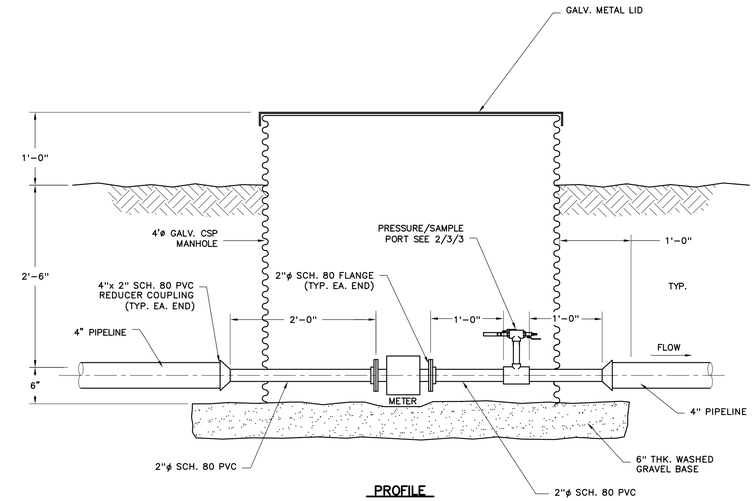

PROFILE

1 / 3 3 METER PIT DETAIL
SCALE: 1" = 1'-0"

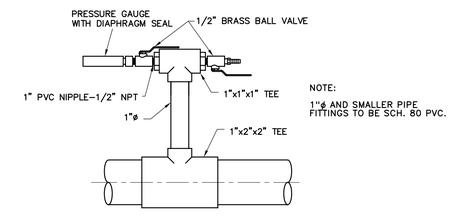

2 / 3 3 PRESSURE GAUGE DETAIL
SCALE: 1" = 4"

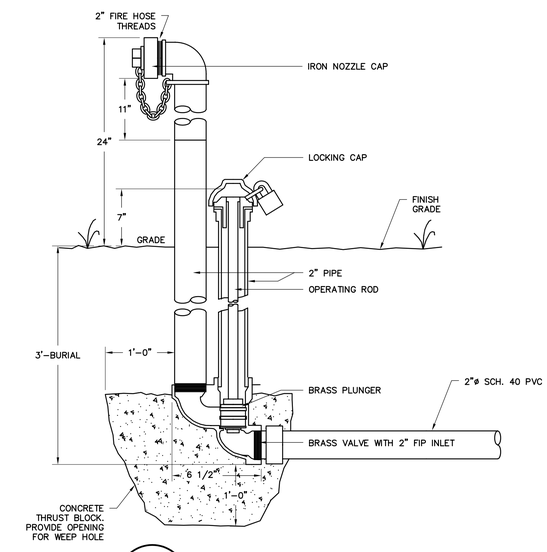

3 / 3 3 HYDRANT DETAIL
NTS

REVISION NO.	DATE	DESCRIPTION	DRAWN BY	CHECKED BY	PROJECT A/E	APPROVAL

U.S. DEPARTMENT OF ENERGY
GRAND JUNCTION, COLORADO

Work Performed by
S.M. Stoller Corporation
Under DOE Contract
No. DE-AC01-02GJ79491

PROJECT LOCATION: MOAB, UTAH

REFERENCE

APPROVALS		DATE
DRAWN BY:	J. WHITNEY	7/29/04
ENGINEER	G. SMITH	7/29/04
PROJECT ENGINEER	G. SMITH	7/29/04
APPROVED BY:	M. MADRIL	7/29/04
PROJECT MANAGER	T. WRIGHT	7/29/04
DOE CONCURRENCE		

MOAB PROJECT
GROUND WATER INTERIM ACTION EXPANSION

WELL FIELD PLAN AND DETAILS

PROJECT NO. MOA-999-0006-06-008
DRAWING NO. X00705-R00-C01-D+
SHT. 3 OF 12

N:\MOA\999\0006\06\008\X00705\X0070500.DWG 07/30/04 11:21am J50191

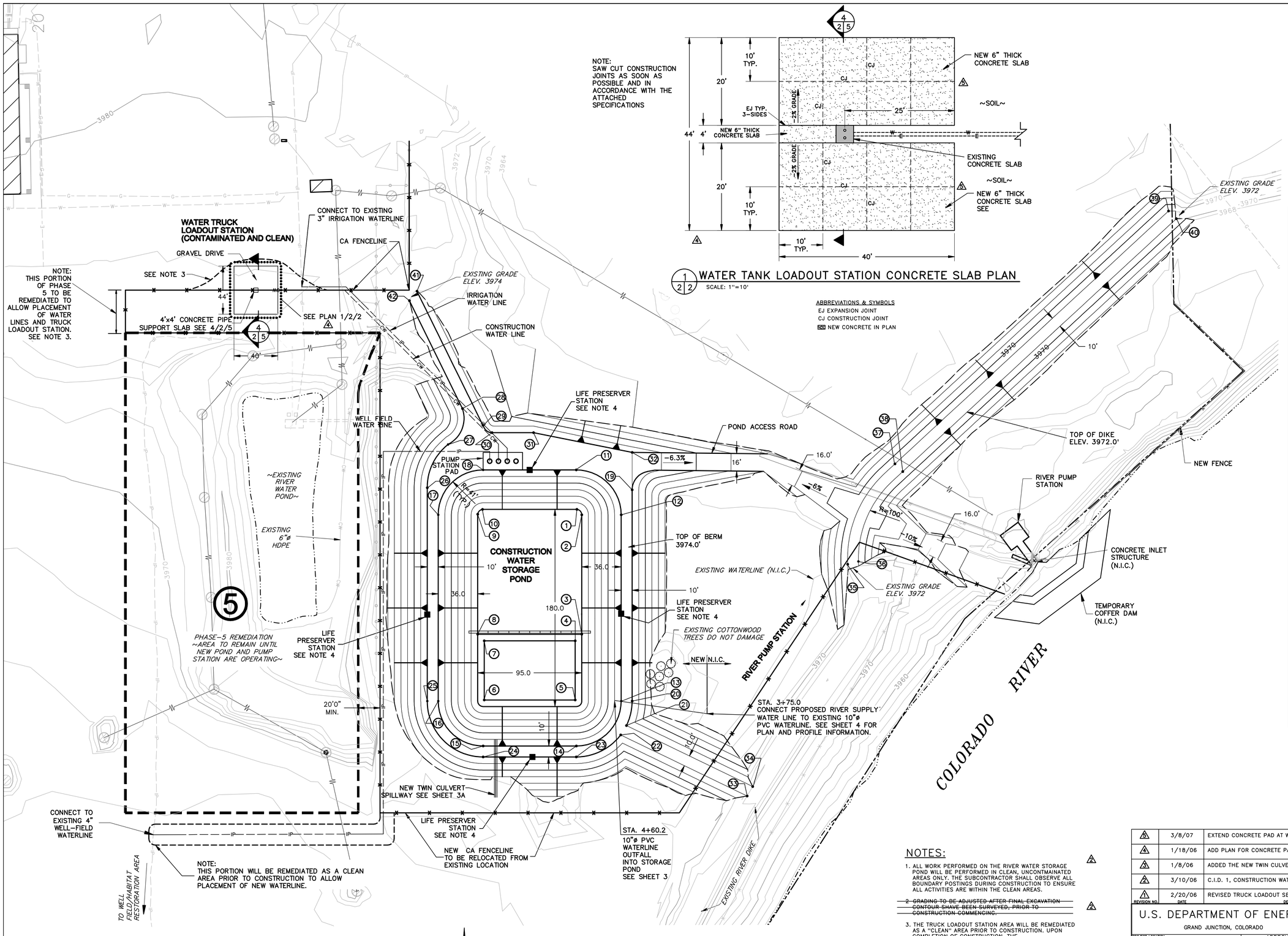

PROJECT SITE PLAN

1/2 WATER TANK LOADOUT STATION CONCRETE SLAB PLAN
SCALE: 1"=10'

ABBREVIATIONS & SYMBOLS
EJ EXPANSION JOINT
CJ CONSTRUCTION JOINT
NEW CONCRETE IN PLAN

GRADE CONTROL POINTS			
POINT ID	NORTHING	EASTING	ELEVATION
1	N 6666159.5	E 2186816.4	3962.0'
2	N 6666154.5	E 2186820.9	3962.0'
3	N 6666045.5	E 2186820.9	3962.0'
4	N 6666039.5	E 2186814.9	3960.0'
5	N 6665985.5	E 2186814.9	3960.0'
6	N 6665985.5	E 2186731.9	3960.0'
7	N 6666039.5	E 2186731.9	3960.0'
8	N 6666045.5	E 2186725.9	3962.0'
9	N 6666155.1	E 2186725.9	3962.0'
10	N 6666159.5	E 2186730.3	3962.0'
11	N 6666195.5	E 2186815.9	3974.0'
12	N 6666154.5	E 2186856.9	3974.0'
13	N 6665984.5	E 2186856.9	3974.0'
14	N 6665943.5	E 2186815.9	3974.0'
15	N 6665943.5	E 2186730.9	3974.0'
16	N 6665984.5	E 2186689.9	3974.0'
17	N 6666154.5	E 2186689.9	3974.0'
18	N 6666195.5	E 2186730.9	3974.0'
19	N 6666177.3	E 2186866.9	3974.0'
20	N 6665984.5	E 2186866.9	3974.0'
21	N 6665962.7	E 2186861.7	3974.0'
22	N 6665953.6	E 2186856.4	3974.0'
23	N 6665933.5	E 2186815.9	3974.0'
24	N 6665933.5	E 2186730.9	3974.0'
25	N 6665984.5	E 2186679.9	3974.0'
26	N 6666179.3	E 2186679.9	3974.0'
27	N 6666218.7	E 2186698.8	3974.0'
28	N 6666251.5	E 2186712.0	3974.0'
29	N 6666236.2	E 2186730.7	3974.0'
30	N 6666229.5	E 2186739.0	3974.0'
31	N 6666229.5	E 2186776.9	3974.0'
32	N 6666211.5	E 2186866.9	3974.0'
33	N 6665897.9	E 2186971.8	3974.0'
34	N 6665906.5	E 2186976.9	3974.0'
35	N 6666109.4	E 2187063.6	3972.0'
36	N 6666112.0	E 2187073.3	3972.0'
37	N 6666201.0	E 2187106.7	3972.0'
38	N 6666194.0	E 2187113.8	3972.0'
39	N 6666431.8	E 2187356.4	3972.0'
40	N 6666424.8	E 2187363.5	3972.0'
41	N 6666358.7	E 2186670.5	3974.0'
42	N 6666350.0	E 2186663.6	3974.0'

NOTES:

1. ALL WORK PERFORMED ON THE RIVER WATER STORAGE POND WILL BE PERFORMED IN CLEAN, UNCONTMAINATED AREAS ONLY. THE SUBCONTRACTOR SHALL OBSERVE ALL BOUNDARY POSTINGS DURING CONSTRUCTION TO ENSURE ALL ACTIVITIES ARE WITHIN THE CLEAN AREAS.

2. ~~GRADING TO BE ADJUSTED AFTER FINAL EXCAVATION CONTOUR SHAVE BEEN SURVEYED, PRIOR TO CONSTRUCTION COMMENCING.~~

3. THE TRUCK LOADOUT STATION AREA WILL BE REMEDIATED AS A "CLEAN" AREA PRIOR TO CONSTRUCTION. UPON COMPLETION OF CONSTRUCTION, THE CONTAMINATED/CLEAN BOUNDARY WILL SPLIT THE TRUCK LOADOUT STATION TO PROVIDE THE REQUIRED SERVICES.

4. PROVIDE AND INSTALL LIFE PRESERVER STATIONS AT MINIUMUM SPACING OF 200' BETWEEN STATIONS AS MEASURED ALONG CENTERLINE OF TOP OF BERM. SEE DETAIL 2\2\5 (4 TYP.)

REVISION NO.	DATE	DESCRIPTION	DRAWN BY	CHECKED BY	PROJECT A/E	APPROVAL
5	3/8/07	EXTEND CONCRETE PAD AT WATER TRUCK LOADOUT 10' EAST	JW	DN		DN
4	1/18/06	ADD PLAN FOR CONCRETE PAD AT WATER TRUCK LOADOUT	JW	DN	DN	DN
3	1/8/06	ADDED THE NEW TWIN CULVERT SPILLWAY	JW	DN	DN	DN
2	3/10/06	C.I.D. 1, CONSTRUCTION WATER SYSTEM EXPANSION	JA	DN	DN	DN
1	2/20/06	REVISED TRUCK LOADOUT SECTIONS AND DETAILS	JW	DN	DN	DN

U.S. DEPARTMENT OF ENERGY
GRAND JUNCTION, COLORADO

Work Performed by
S.M. Stoller Corporation
Under DOE Contract
No. DE-AC01-02GJ79491

PROJECT LOCATION
MAOB UMTRA PROJECT
MOAB PROJECT SITE
MOAB, UTAH

REFERENCE
CONSTRUCTION WATER SYSTEM
RIVER PUMP STATION IMPROVEMENTS
MOA-999-0007-04-004C

APPROVALS		DATE
DRAWN BY:	J. BAVIERE	2/03/06
ENGINEER	B. FRAZIER	2/03/06
PROJECT ENGINEER	D. NORDEEN	2/03/06
APPROVED BY:	J. ELMER	2/03/06
PROJECT MANAGER	K. KARP	2/03/06
DOE CONCURRENCE	(SEE RECORD)	

CONSTRUCTION WATER SYSTEM
RIVER WATER STORAGE POND

PROJECT SITE PLAN

PROJECT NO. MOA-999-0007-04-004F
DRAWING NO. X01348-R05-P01-D+
SHT. 2 OF 10

N:\MOA\999\0007\04\004F\X01348\X0134805.DWG 03/08/07 2:15pm D50520

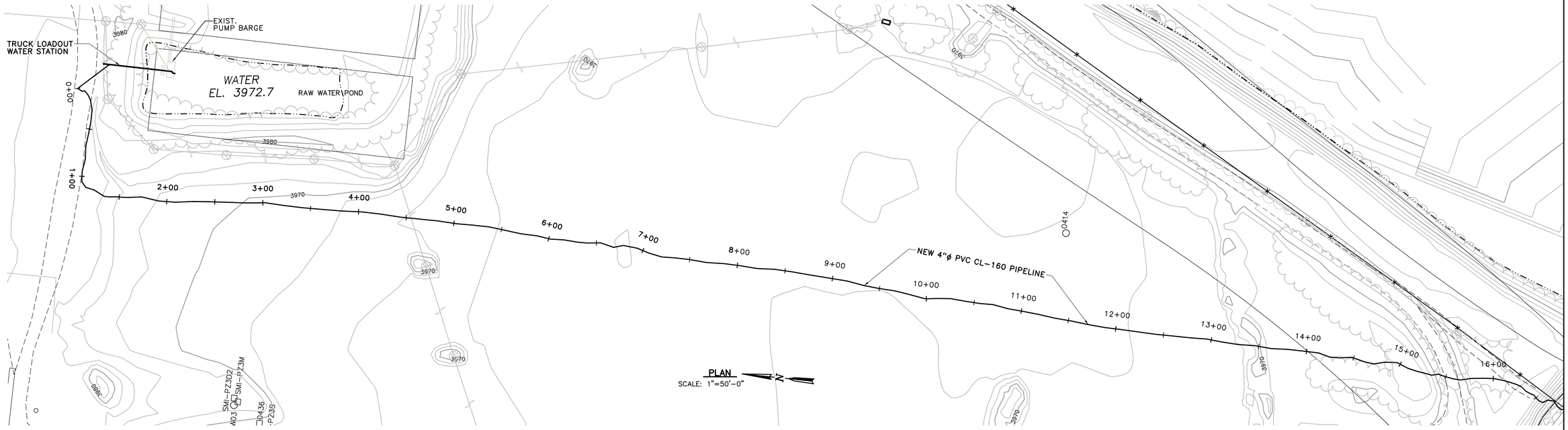

PLAN
SCALE: 1"=50'-0"

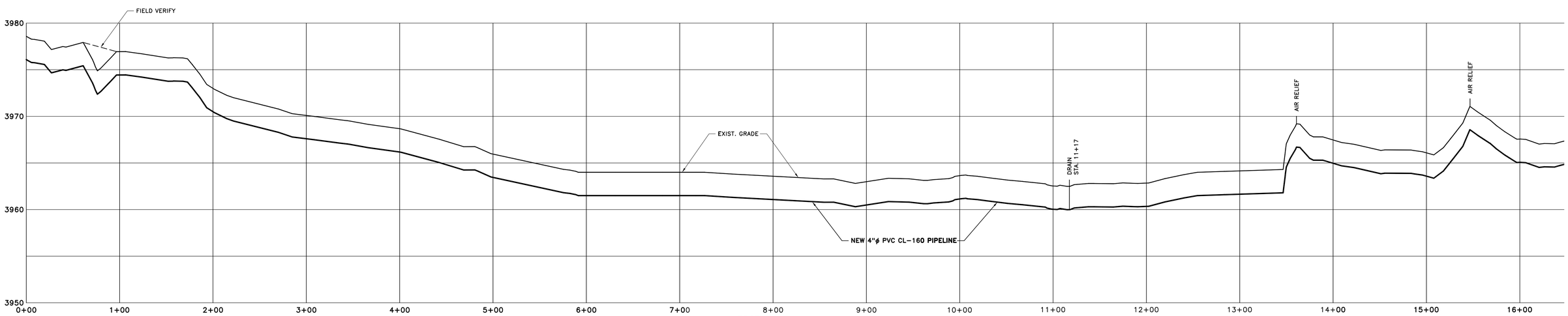

PROFILE
SCALE: HORZ.1"=50'-0"
VERT.1"=5'

NOTE:
PROFILES, AIR RELIEF VALVES AND DRAINS TO BE REVISED W/ PROJECT AS-BUILTS.

REVISION NO.	DATE	DESCRIPTION	DRAWN BY	CHECKED BY	PROJECT A/E	APPROVAL

U.S. DEPARTMENT OF ENERGY
GRAND JUNCTION, COLORADO

Work Performed by
S.M. Stoller Corporation
Under DOE Contract
No. DE-AC01-02GJ79491

PROJECT LOCATION
MOAB, UTAH

REFERENCE

APPROVALS		DATE
DRAWN BY:	J. WHITNEY	7/29/04
ENGINEER	G. SMITH	7/29/04
PROJECT ENGINEER	G. SMITH	7/29/04
APPROVED BY:	M. MADRIL	7/29/04
PROJECT MANAGER	T. WRIGHT	7/29/04
DOE CONCURRENCE		

MOAB PROJECT
GROUND WATER INTERIM ACTION REMEDIATION

WELL FIELD PIPELINE;
PLAN AND PROFILE

PROJECT NO. MOA-999-0006-06-008
DRAWING NO. X00707-R00-P01-D+
SHT. 5 OF 12

N:\MOA\999\0006\06\008\X00707\X0070700.DWG 07/30/04 11:27am J50191

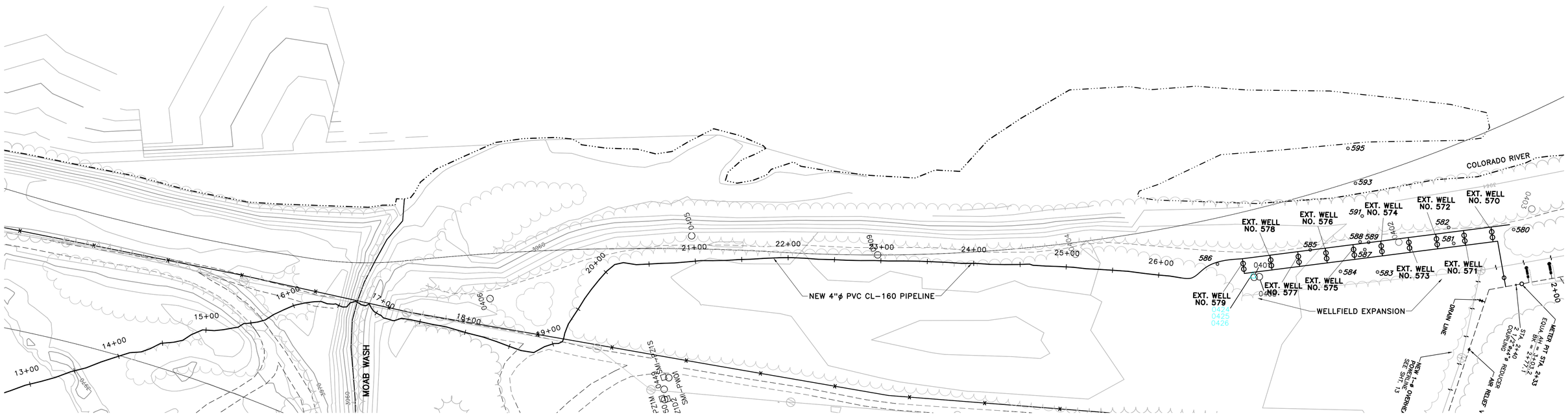

PLAN
SCALE: 1"=50'-0"

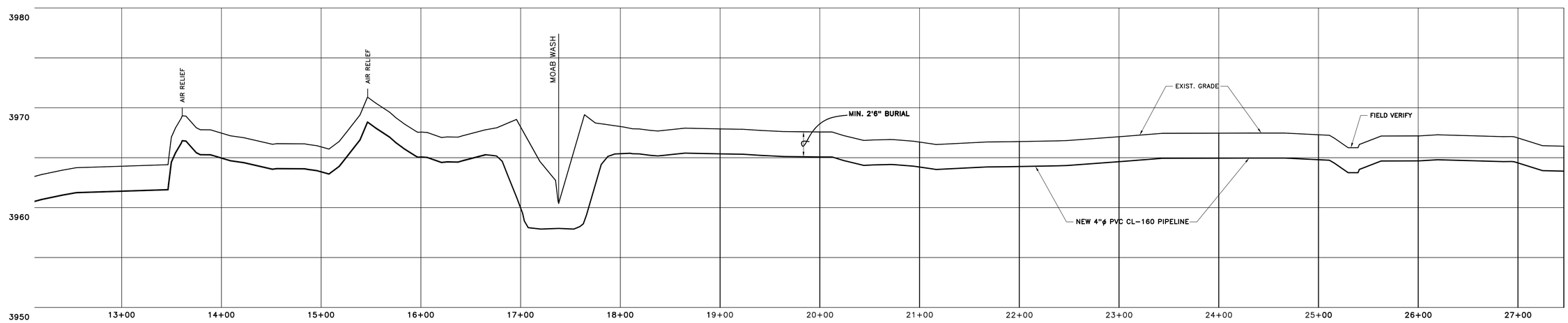

PROFILE
SCALE: HORZ.1"=50'-0"
VERT.1"=5'

NOTE:
PROFILES, AIR RELIEF VALVES AND DRAINS TO BE REVISED W/ PROJECT AS-BUILTS.

REVISION NO.	DATE	DESCRIPTION	DRAWN BY	CHECKED BY	PROJECT A/E	APPROVAL

U.S. DEPARTMENT OF ENERGY
GRAND JUNCTION, COLORADO

Work Performed by
S.M. Stoller Corporation
Under DOE Contract
No. DE-AC01-02GJ79491

PROJECT LOCATION: MOAB, UTAH

REFERENCE:

APPROVALS		DATE
DRAWN BY:	J. WHITNEY	7/29/04
ENGINEER	G. SMITH	7/29/04
PROJECT ENGINEER	G. SMITH	7/29/04
APPROVED BY:	M. MADRIL	7/29/04
PROJECT MANAGER	T. WRIGHT	7/29/04
DOE CONCURRENCE		

MOAB PROJECT
GROUND WATER INTERIM ACTION REMEDIATION

WELL FIELD PIPELINE;
PLAN AND PROFILE

PROJECT NO. MOA-999-0006-06-008
DRAWING NO. X00708-R00-P02-D+
SHT. 6 OF 12

N:\MOA\999\0006\06\008\X00708\X0070800.DWG 07/30/04 11:31am J50191

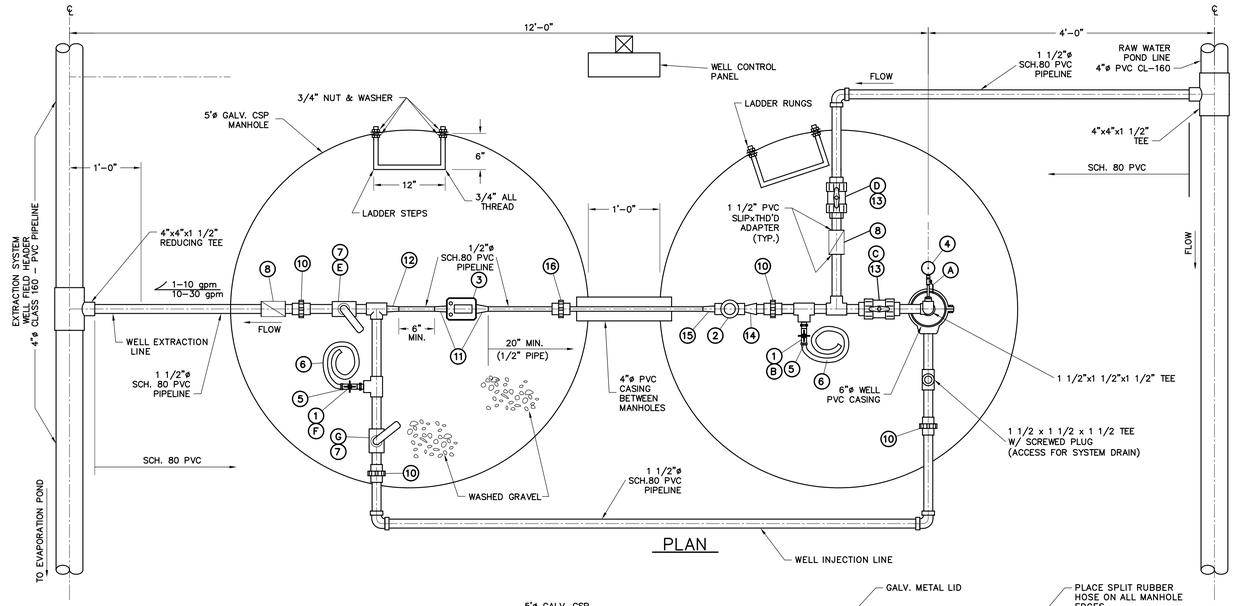

PLAN

VALVE OPERATIONS SCHEDULE		
VALVE	EXTRACTION MODE	INJECTION MODE
A	NORMALLY OPEN	NORMALLY CLOSED
B	NORMALLY CLOSED	NORMALLY CLOSED
C	NORMALLY OPEN	NORMALLY CLOSED
D	NORMALLY CLOSED	NORMALLY OPEN
E	THROTTLING	NORMALLY CLOSED
F	NORMALLY CLOSED	NORMALLY CLOSED
G	NORMALLY CLOSED	THROTTLING

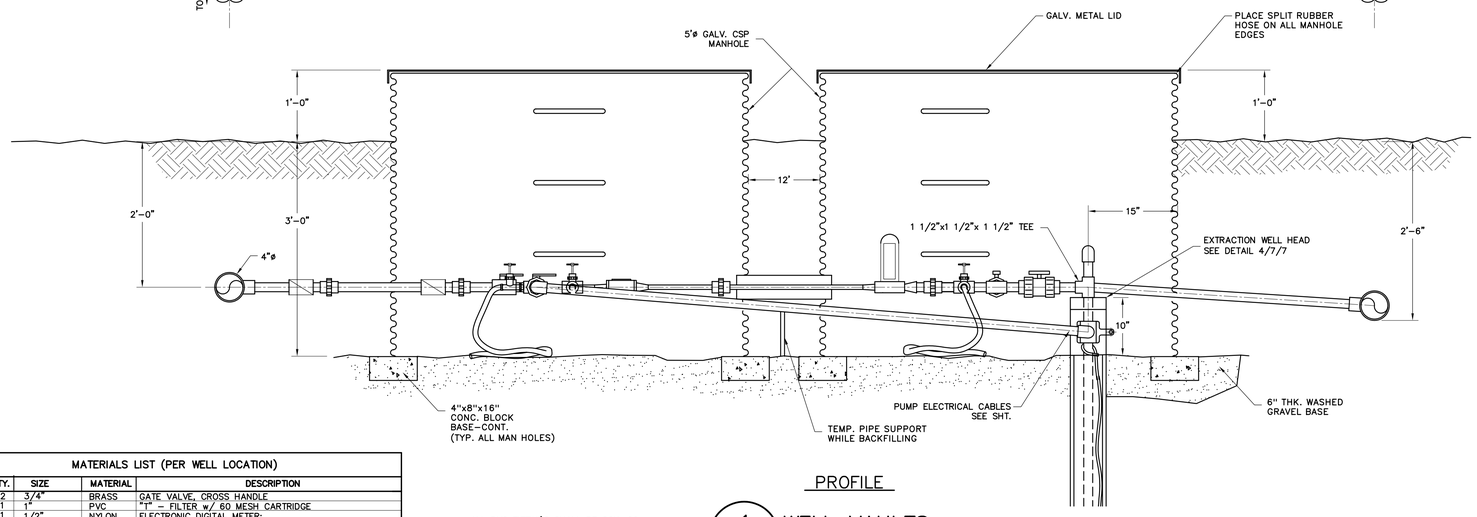

PROFILE

MATERIALS LIST (PER WELL LOCATION)				
ITEM NO.	QTY.	SIZE	MATERIAL	DESCRIPTION
1	2	3/4"	BRASS	GATE VALVE, CROSS HANDLE
2	1	1"	PVC	"T" - FILTER w/ 60 MESH CARTRIDGE
3	1	1/2"	NYLON	ELECTRONIC DIGITAL METER;
4	1	NA	ST. STEEL	PRESSURE GAUGE PER DETAIL 1/9/9
5	2	3/4"	BRASS	NPTx 3/4" HOSE ADAPTER
6	2	3/4"	RUBBER	RUBBER HOSE, 6-FOOT, BARE END
7	2	1 1/2"	BRASS	BALL VALVE
8	2	1 1/2"	PVC	INDUSTRIAL BALL, CHECK VALVE SCH-80
9	2		PVC	UNION
10	4	1 1/2"	PVC	UNION
11	2	1/2"	PVC	MALE THRD'D ADAPTER
12	1	1 1/2"x1"	PVC	REDUCER BUSHING
13	2	1 1/2"	PVC	TRUE UNION SCH-80 BALL VALVE
14	1	1 1/2"x1"	PVC	REDUCER COUPLING
15	1	1"x1/2"	PVC	REDUCER COUPLING
16	1	1/2"	PVC	UNION

ALL PVC FITTINGS SHALL BE SCH. 80

1/7 7 WELL VAULTS
SCALE: 1" = 1'-0"

MATERIAL SPECIFICATIONS

ELECTRONIC DIGITAL METER
"GREAT PLAINS METER INC."
1/2" STAINLESS STEEL METER; 1-10 gpm, NO. GPA2S050N

"T" - WATER FILTER
"VU-FLOW"
1" SPIN DOWN SEPERATOR; 1-25gpm, NO. NT-150-OP

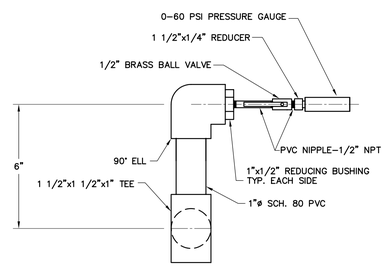

3/7 7 PRESSURE GAUGE DETAIL
N.T.S.

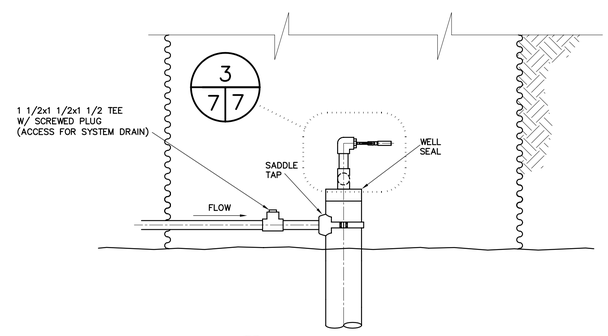

4/7 7 ELEVATION
N.T.S.

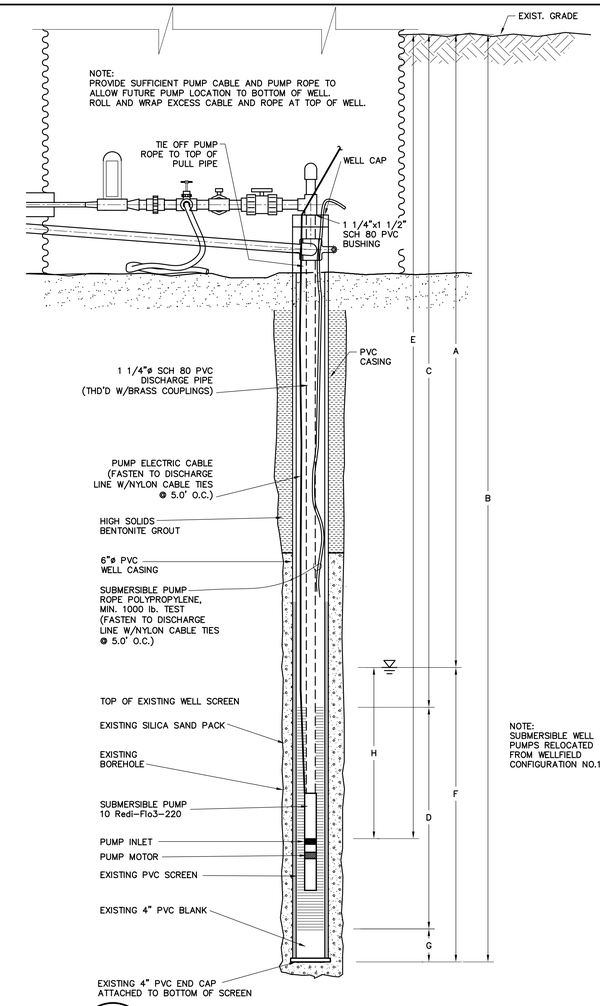

2/9 9 TYPICAL EXTRACTION WELL DETAIL
N.T.S.
NOTE: WELL TO BE INSTALLED BY OTHERS

WELL TABLE

WELL NO.	A* DTW*	B TD	C TOS	D SL	E PID	F* TST*	G S	H* WAPI*
570	10	30	15	15		20		
571	10	40	25	15		30		
572	10	30	15	15		20		
573	10	40	25	15		30		
574	10	30	15	15		20		
575	10	40	25	15		30		
576	10	30	15	15		20		
577	10	40	25	15		30		
578	10	30	15	15		20		
579	10	40	25	15		30		

NOTES:
*= VALUE BASED ON WATER LEVEL MEASURED ON 7/1/03. COLORADO RIVER FLOW, WAS 4,620 cfs ACCORDING TO THE USGS CISCO STATION ON 7/1/03.

DTW = DEPTH TO WATER
TD = TOTAL DEPTH
TOS = TOP OF SCREEN DEPTH
SL = SCREEN LENGTH
PID = PUMP INTAKE DEPTH
TST = TOTAL SATURATED THICKNESS
S = SUMP LENGTH
WAPI = WATER ABOVE PUMP INTAKE

REVISION NO.	DATE	DESCRIPTION	DRAWN BY	CHECKED BY	PROJECT A/E	APPROVAL

U.S. DEPARTMENT OF ENERGY
GRAND JUNCTION, COLORADO

Work Performed by
S.M. Stoller Corporation
Under DOE Contract
No. DE-AC01-02GJ79491

PROJECT LOCATION: MOAB, UTAH

REFERENCE

APPROVALS		DATE
DRAWN BY:	J. WHITNEY	7/29/04
ENGINEER	G. SMITH	7/29/04
PROJECT ENGINEER	G. SMITH	7/29/04
APPROVED BY:	M. MADRIL	7/29/04
PROJECT MANAGER	T. WRIGHT	7/29/04
DOE CONCURRENCE		

MOAB PROJECT
GROUND WATER INTERIM ACTION EXPANSION

WELL VAULT DETAILS

PROJECT NO. MOA-999-0006-06-008
DRAWING NO. X00710-R00-M02-D+
SHT. 7 OF 12

N:\MOA\999\0006\06\008\X00710\X0071000.DWG 07/30/04 11:35am J50191

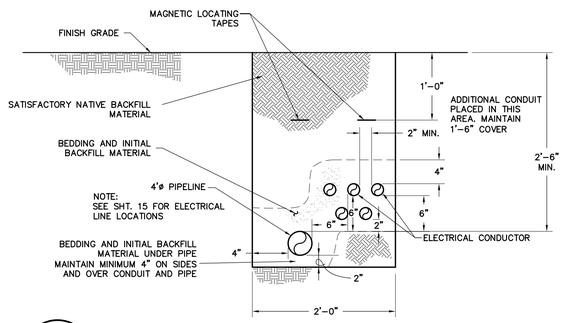

1 / 3 8 WELL FIELD PIPELINE TRENCH SECTION

1"=1'-0"

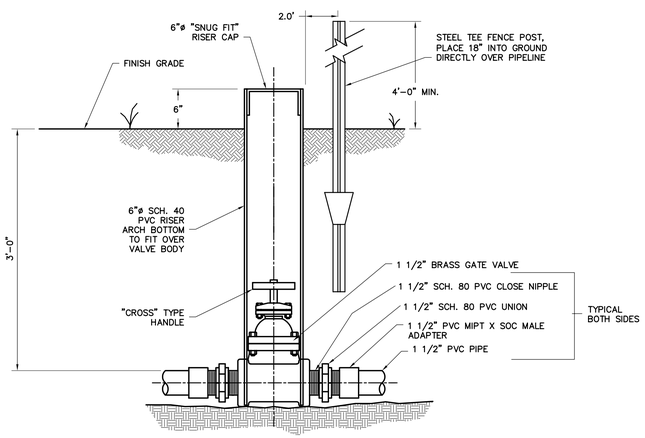

3 / 8 8 VALVE BOX DETAIL

NTS

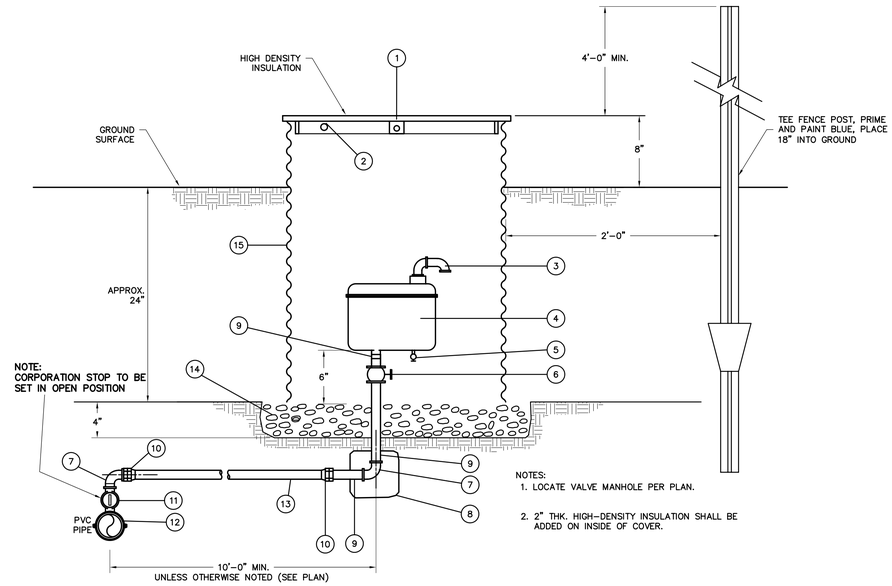

NOTES:
1. LOCATE VALVE MANHOLE PER PLAN.
2. 2" THK. HIGH-DENSITY INSULATION SHALL BE ADDED ON INSIDE OF COVER.

DETAIL 4 – SCHEDULE		
ITEM	NO.	DESCRIPTION
1	1	3/16" GALV. PROTECTIVE COVER, 25 1/2"ø W/4-3/16"x2"x2" STOPS, WELD STOPS TO COVER
2	12	4-1" DIA. HOLES, EQUALLY SPACED 1" OFF RIM. (TYP. TOP & BOTTOM)
3	2	90° SCH. 80 PVC STREET ELBOW (SIZE TO FIT AIR VALVE)
4	1	1" AIR/VACUUM RELEASE VALVE
5	1	BRASS TEST DRAIN VALVE (SIZE TO FIT AIR VALVE)
6	1	1" BRONZE GATE VALVE
7	1	1"-90° SCH. 80 PVC ELBOW
8	1	CONCRETE THRUST BLOCK (SEE DETAIL 6/26/26)
9	3	1"ø SCH. 80 PVC PIPE NIPPLES (LENGTH AS REQUIRED)
10	2	FLARExF.I.P. ADAPTER – BRONZE
11	1	1" BRONZE CORP. STOP W/CORP. PLUG AXIS PARALLEL TO PIPE AXIS 1/4 BEND (O-RINGxFLARE)
12	1	BRONZE SERVICE SADDLE
13	NA	1" COPPER TUBING – TYPE K SOFT.
14	NA	4" THK. DRAIN ROCK
15	1	24" ø C.S.P. GALVANIZED

2 / 8 AIR/VACUUM RELEASE VALVE DETAIL

SCALE: 1 1/2"=1'-0"

5,6

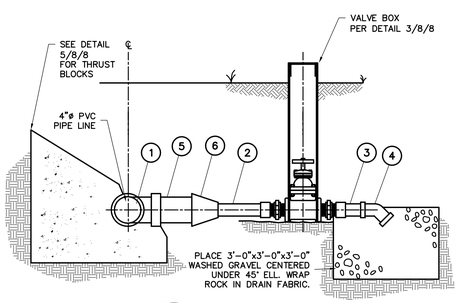

4 / 8 PIPELINE DRAIN DETAIL

NTS

5,6

DETAIL 4 – SCHEDULE	
ITEM	DESCRIPTION
1	4"x 4" x 4" TEE
2	1 1/2"ø SCH. 80 PVC (CUT TO FIT)
3	1 1/2"ø SCH. 80x3'-0" PVC
4	1 1/2"ø SCH. 80 PVC 45° ELL
5	4"ø x2'-0" SCH. 80 PVC
6	4"ø x 1 1/2"ø SCH. 80 PVC REDUCER

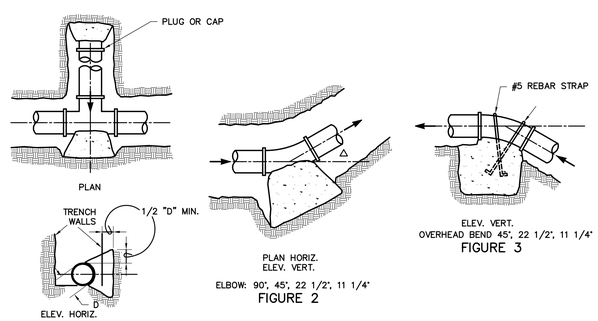

SIZE OF PIPE	MINIMUM BEARING AREA IN SQUARE FEET							
	FIGURE 1	FIGURE 2				FIGURE 3		
		90°	45°	22 1/2°	11 1/4°	45°	22 1/2°	11 1/4°
1 1/4"-2 1/2"	2	2	1	1	1	1.0	.5	.5
3"-4"	3	3	2	2	2	2.0	2.0	1.0

THRUST BLOCK NOTES
1. ALL BEARING SURFACES OF THRUST BLOCK SHALL BE AGAINST UNDISTURBED SOIL OR SOIL COMPACTED TO 95% MAX. DENSITY.
2. THRUST BLOCKS SHALL BE 4" MIN. THICKNESS; 3,000 PSI

5 / 8 8 THRUST BLOCK DETAIL

NTS

REVISION NO.	DATE	DESCRIPTION	DRAWN BY	CHECKED BY	PROJECT A/E	APPROVAL

U.S. DEPARTMENT OF ENERGY
GRAND JUNCTION, COLORADO

Work Performed by
S.M. Stoller Corporation
Under DOE Contract
No. DE-AC01-02GJ79491

PROJECT LOCATION: MOAB, UTAH

REFERENCE

APPROVALS		DATE
DRAWN BY:	J. WHITNEY	7/29/04
ENGINEER	G. SMITH	7/29/04
PROJECT ENGINEER	G. SMITH	7/29/04
APPROVED BY:	M. MADRIL	7/29/04
PROJECT MANAGER	T. WRIGHT	7/29/04
DOE CONCURRENCE		

MOAB PROJECT
GROUND WATER INTERIM ACTION EXPANSION

MISCELLANEOUS PIPE DETAILS

PROJECT NO. MOA-999-0006-06-006
DRAWING NO. X00711-R00-M03-D+
SHT. 8 OF 12

N:\MOA\999\0006\06\008\X00711\X0071100.DWG 07/30/04 11:38am J50191

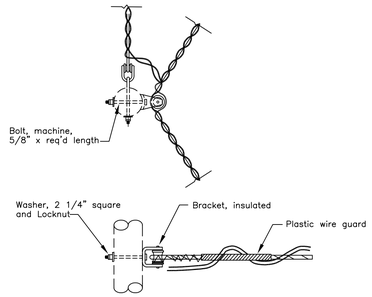

OVERHEAD SECONDARY ANGLE ASSEMBLY

SCALE: NONE

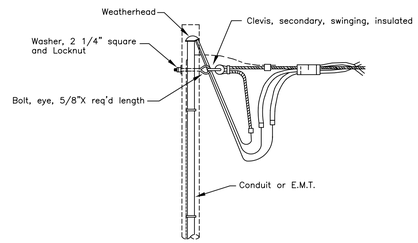

OVERHEAD SECONDARY DEAD-END ASSEMBLY

SCALE: NONE

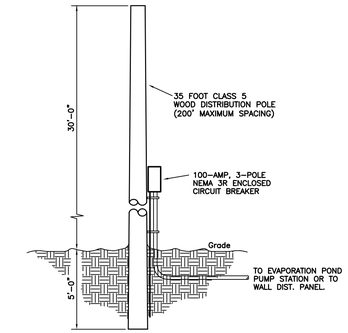

DISTRIBUTION POLE

SCALE: NONE

NOTE: CIRCUIT BREAKER TO BE MOUNTED AT DEAD-END SERVICE POLE FOR WELLS AND EVAPORATION POND PUMP STATION SERVICE DISCONNECT.

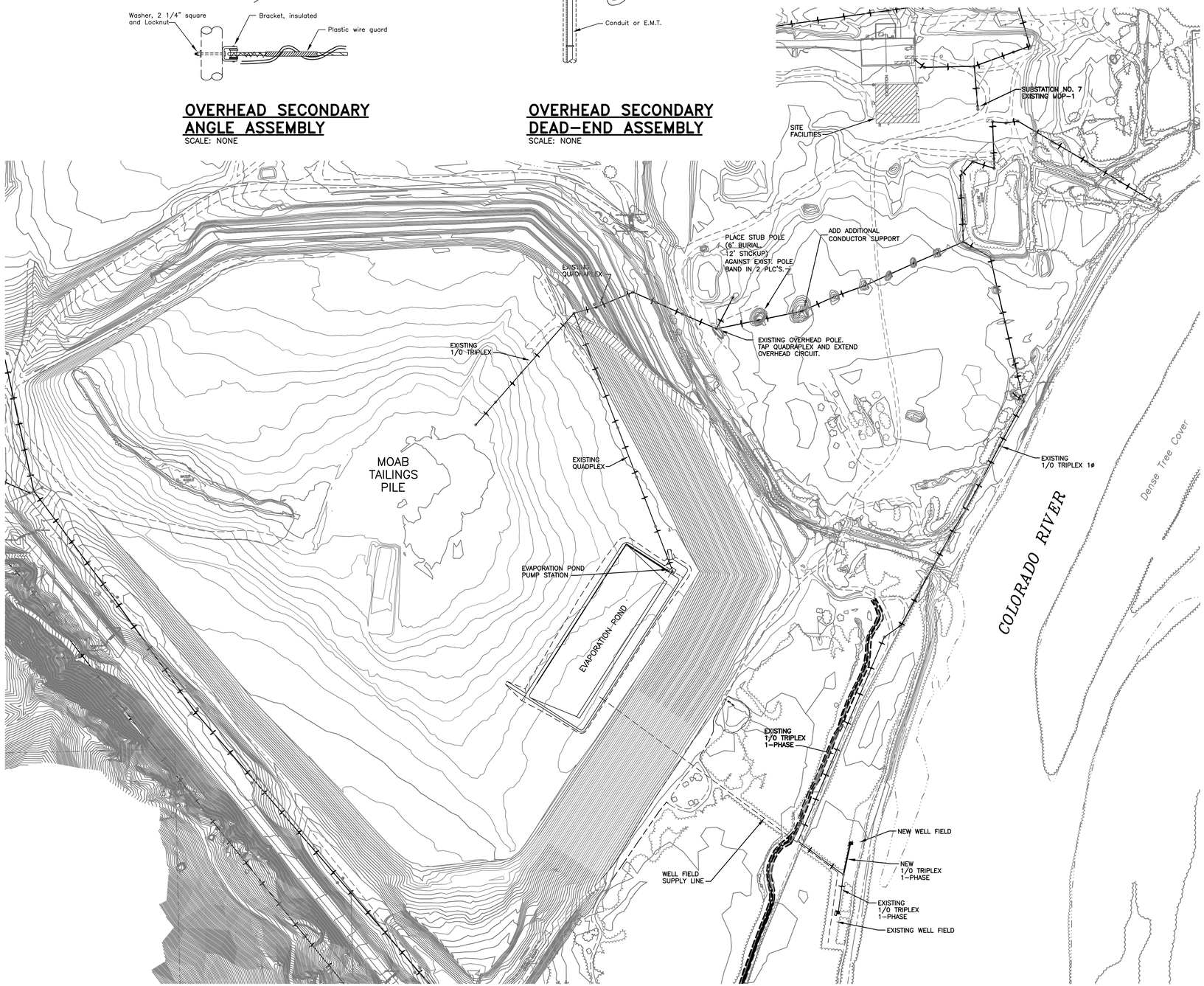

PARTIAL ELECTRICAL SITE PLAN

SCALE: 1" = 200'

north

ELECTRICAL LEGEND

- OH — OVERHEAD DISTRIBUTION CONDUCTOR (QUAD OR TRIPLEX INDICATED)
  - EXISTING POWER POLE
  - NEW POWER POLE
- CONDUIT AND/OR CONDUCTOR CONCEALED IN FLOOR, SLAB, OR BELOW GRADE
- 42" — DUPLEX RECEPTACLE OUTLET
  - GFI – GROUND FAULT INTERRUPTING
  - WP – WEATHERPROOF
- BRANCH CIRCUIT PANELBOARD– NEMA 1 ENCLOSURE UNLESS OTHERWISE NOTED. REFER TO PANEL SCHEDULE FOR SIZE & SPECIFICATION
- WELL MOTOR
- TRANSFORMER
- (2) POWER CABLE DESIGNATION (SEE SCHEDULE)
- (3) ELECTRICAL FLAG NOTE

NOTES

1. ALL CLEARANCES AND PROTECTIVE DEVICES TO BE IN CONFORMANCE TO THE MOST STRINGENT REQUIREMENTS OF EITHER THE NESC, NEC OR OTHER CODES OF GOVERNMENTAL OR REGULATING AUTHORITIES AS APPLICABLE.
2. GUY POLES AS REQUIRED.
3. MODIFY EXISTING OVERHEAD ANGLE ASSEMBLY. ADD SECONDARY INSULATED CLEVIS AND TAP EXISTING LINE.

REVISION NO.	DATE	DESCRIPTION	DRAWN BY	CHECKED BY	PROJECT A/E	APPROVAL

U.S. DEPARTMENT OF ENERGY
GRAND JUNCTION OFFICE
GRAND JUNCTION, COLORADO

Work Performed by
S. M. Stoller Corporation
Under DOE Contract
No. DE-AC01-02GJ79491

PROJECT LOCATION: MOAB, UTAH

APPROVALS		DATE
DRAWN BY:	R. MOLANDER	7/29/04
ENGINEER:	M. WELENC	7/29/04
PROJECT ENGINEER:	G. SMITH	7/29/04
APPROVED BY:	M. MADRIL	7/29/04
PROJECT MANAGER:	T. WRIGHT	7/29/04
DOE CONCURRENCE:		

MOAB PROJECT
GROUND WATER INTERIM ACTION EXPANSION

ELECTRICAL SITE PLAN AND LEGEND

REFERENCE: ESC ELECTRICAL SYSTEMS CONSULTANTS
ELECTRICAL CONSULTING ENGINEERS
FORT COLLINS, COLORADO
(970) 224-9100

PROJECT NO. MOA-999-0006-06-008
DRAWING NO. X00819-R00-E01-D+
SHT. 9 OF 12

N:\MOA\999\0006\06\008\X00819\X0081900.DWG 07/30/04 11:45am J50191

204-375 (Site Plan)

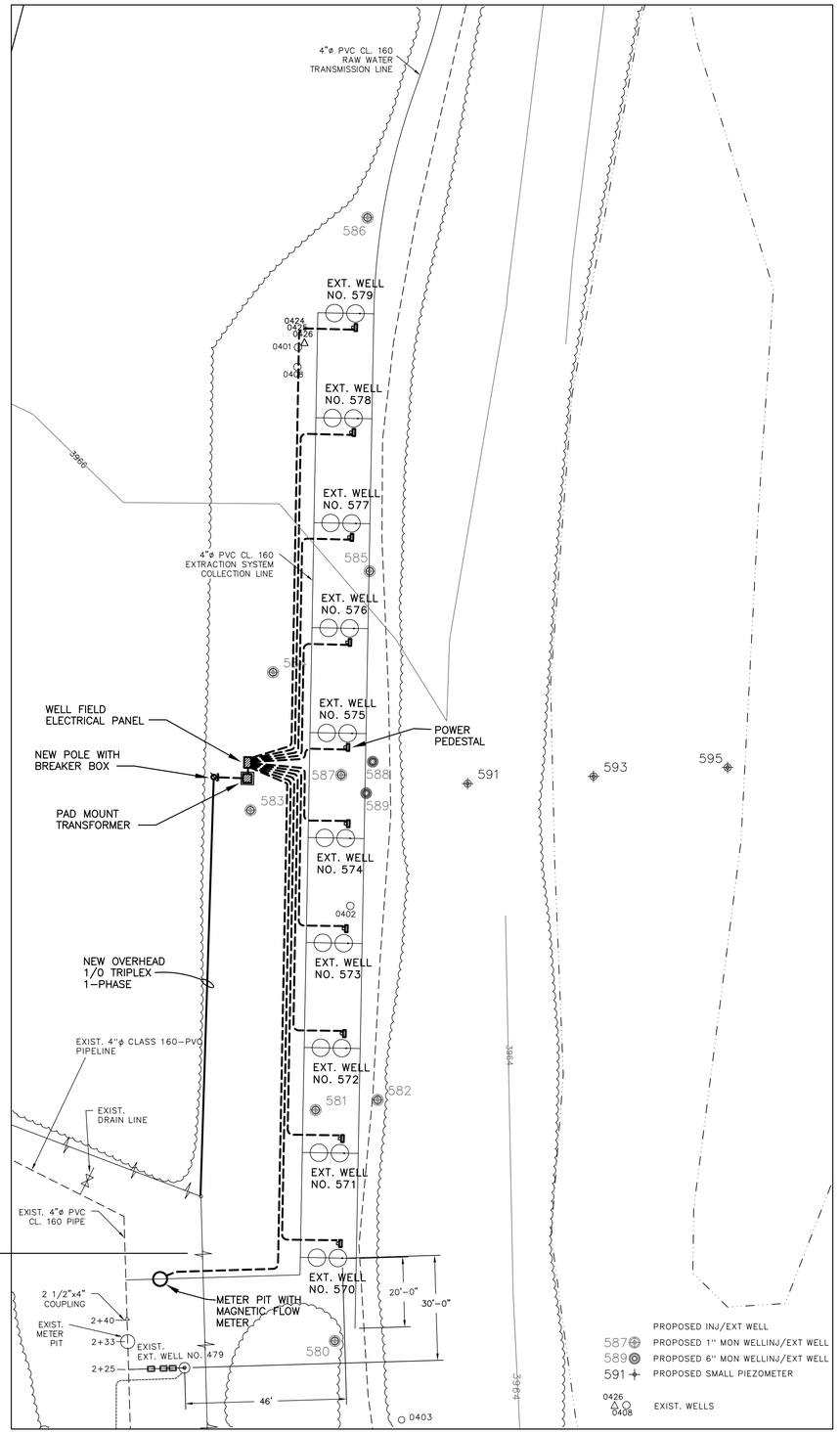

WELL FIELD ELECTRICAL SITE PLAN

SCALE: 1" = 20'-0"

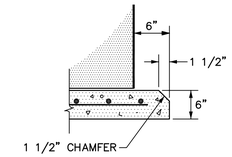

CONCRETE PAD DETAIL

NO SCALE

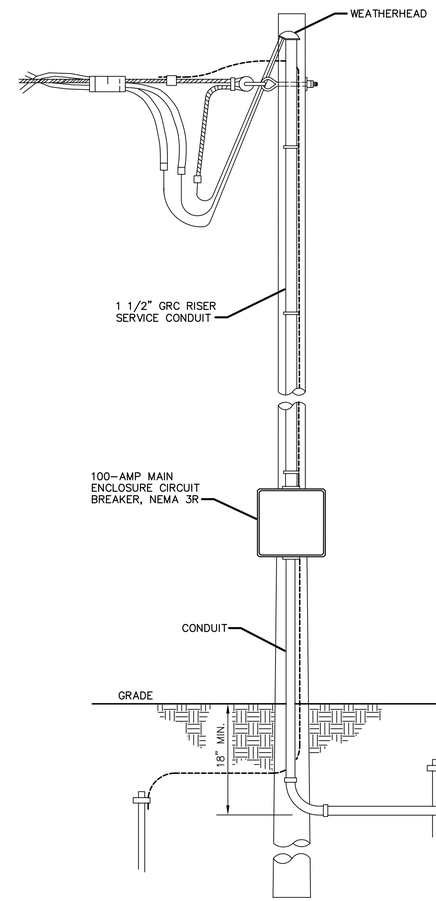

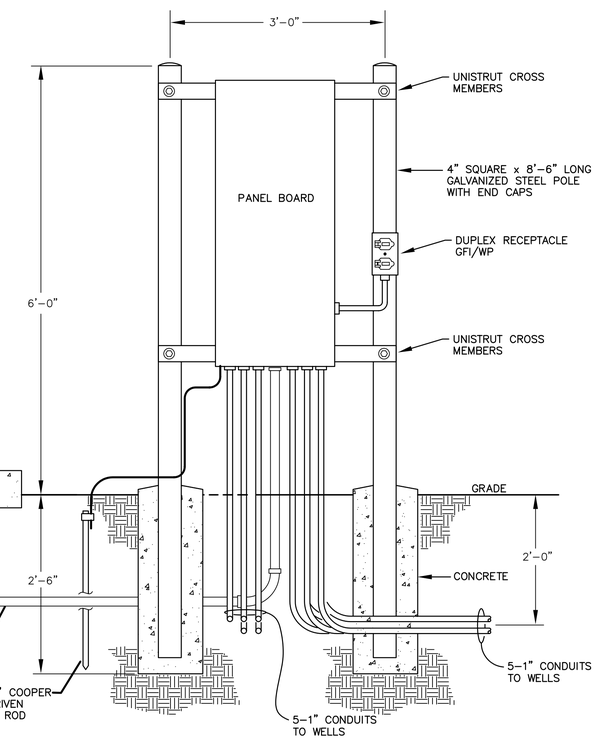

WELL FIELD ELECTRICAL ENCLOSURE ELEVATION

SCALE: 1" = 1'-0"

PANEL SCHEDULE

CIRCUIT NUMBER	BREAKER TRIP	LOAD DESCRIPTION	LOAD WATTS	PHASE	LOAD WATTS	LOAD DESCRIPTION	BREAKER TRIP	CIRCUIT NUMBER
1	30/2	WELL NO. 574	974	A	794	WELL NO. 575	30/2	2
3			794	B	974			4
5	30/2	WELL NO. 573	794	A	974	WELL NO. 576	30/2	6
7			974	B	794			8
9	30/2	WELL NO. 572	974	A	794	WELL NO. 577	30/2	10
11			794	B	974			12
13	30/2	WELL NO. 571	794	A	974	WELL NO. 578	30/2	14
15			974	B	794			16
17	30/2	WELL NO. 570	974	A	794	WELL NO. 579	30/2	18
19			794	B	974			20
21	20	MAGNETIC FLOW METER	100	A	200	GFI RECEPTACLE	20	22
23	20	SPARE	.	B	.	SPARE	20	24
25		SPACE		A		SPACE		26
27		SPACE		B		SPACE		28
29		SPACE		A		SPACE		30

MFGR.	SQUARE-D or EQUAL
TYPE	NQOD
VOLT/PHASE	120/240 VOLT 1-PHASE
WIRE	3-WIRE W/GRND

LOAD			
	A	9140 VA	
	B	8840 VA	
	TOTAL	17,980 VA	75 AMP

MAIN	100
MLO	–
BUS	100
MOUNTING	ENCLOSURE NEMA 3R

REVISION NO.	DATE	DESCRIPTION	DRAWN BY	CHECKED BY	PROJECT A/E	APPROVAL

U.S. DEPARTMENT OF ENERGY
GRAND JUNCTION, COLORADO

Work Performed by
S.M. Stoller Corporation
Under DOE Contract
No. DE-AC01-02GJ79491

PROJECT LOCATION
MOAB, UTAH

REFERENCE

ESC ELECTRICAL SYSTEMS CONSULTANTS
ELECTRICAL CONSULTING ENGINEERS
FORT COLLINS, COLORADO
(970) 224-9100

APPROVALS		
DRAWN BY:	R. MOLANDER	7/29/04
ENGINEER	M. WELENC	7/29/04
PROJECT ENGINEER	G. SMITH	7/29/04
APPROVED BY:	M. MADRIL	7/29/04
PROJECT MANAGER	T. WRIGHT	7/29/04
DOE CONCURRENCE		

MOAB PROJECT
GROUND WATER INTERIM ACTION EXPANSION

WELL FIELD ELECTRICAL PLAN AND DETAILS

PROJECT NO. MOA-999-0006-06-008
SHT. 10 OF 12
DRAWING NO. X00712-R00-E02-D+

N:\MOA\999\0006\06\008\X00712\X0071200.DWG 07/30/04 1:15pm J50191

204-375F (WELL FIELD)

NAMEPLATE SCHEDULE	
ITEM	DESCRIPTION
NP1	EXT. WELL NO. 570
NP2	EXT. WELL NO. 571
NP3	EXT. WELL NO. 572
NP4	EXT. WELL NO. 573
NP5	EXT. WELL NO. 574
NP6	EXT. WELL NO. 575
NP7	EXT. WELL NO. 576
NP8	EXT. WELL NO. 577
NP9	EXT. WELL NO. 578
NP10	EXT. WELL NO. 579

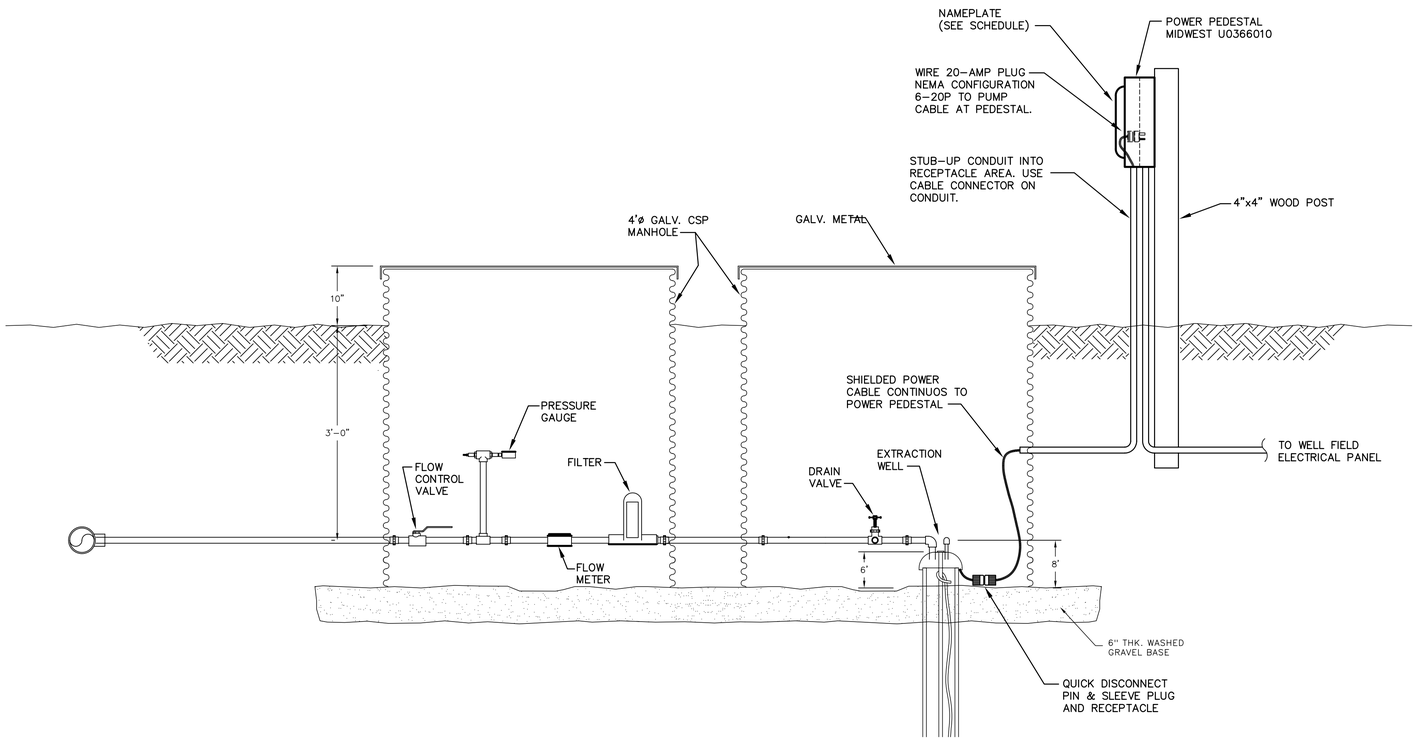

WELL VAULT ELECTRICAL PLAN

SCALE: 1" = 1'-0"

REVISION NO.	DATE	DESCRIPTION	DRAWN BY	CHECKED BY	PROJECT A/E	APPROVAL

U.S. DEPARTMENT OF ENERGY
GRAND JUNCTION, COLORADO

Work Performed by
S.M. Stoller Corporation
Under DOE Contract
No. DE-AC01-02GJ79491

PROJECT LOCATION: MOAB, UTAH

REFERENCE

APPROVALS		DATE
DRAWN BY:	R. MOLANDER	7/29/04
ENGINEER:	M. WELENC	7/29/04
PROJECT ENGINEER:	C. SMITH	7/29/04
APPROVED BY:	M. MADRIL	7/29/04
PROJECT MANAGER:	T. WRIGHT	7/29/04
DOE CONCURRENCE:		

MOAB PROJECT
GROUND WATER INTERIM ACTION EXPANSION

WELL FIELD ELECTRICAL
WELL VAULT DETAILS

PROJECT NO. MOA-999-0006-06-008
DRAWING NO. X00818-R00-E03-D+
SHT. 11 OF 12

N:\MOA\999\0006\06\008\X00818\X0081800.DWG 07/30/04 1:13pm J50191

204-375F (DETAILS)

CONDUCTOR SCHEDULE

1. (3–No. 3 THWN CU & 1–No. 8 GC) 1 1/2"C.
2. (3–No. 1/0 THWN CU & 1–No. 6 GC) 1 1/2"C.
3. (3–No. 10 THWN CU & 1–No. 10 GC) 1"C.
4. (SHIELDED POWER CONDUCTOR BELDEN 29503) 1"C. (SEE NOTE)
5. (2–No. 12 THWN CU & 1–No. 12 GC) 1/2"C.

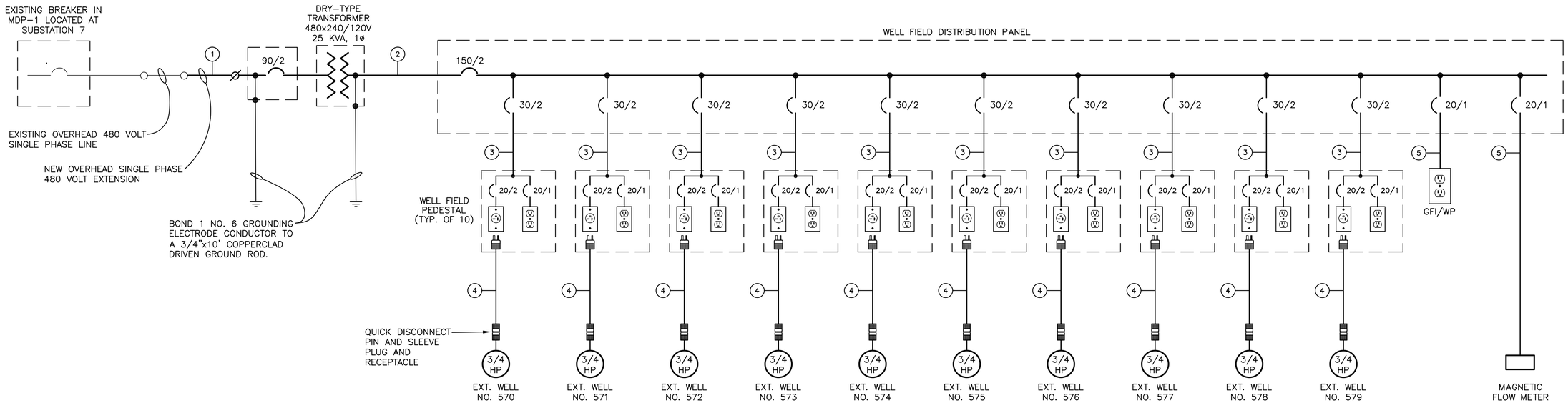

WELL FIELD ELECTRICAL ONE LINE DIAGRAM

SERVICE CHARACTERISTICS: 120/240 VOLT, 1–PHASE, 3–WIRE

NOTE:
SHIELDED POWER CABLE TO BE No. 10 WITH XLPE INSULATION WITH 100% FOIL COVERAGE, 85% COPPER BRAID WITH DRAIN WIRE BELDEN BELOFOIL.

REVISION NO.	DATE	DESCRIPTION	DRAWN BY	CHECKED BY	PROJECT A/E	APPROVAL

U.S. DEPARTMENT OF ENERGY
GRAND JUNCTION OFFICE
GRAND JUNCTION, COLORADO

Work Performed by
S. M. Stoller Corporation
Under DOE Contract
No. DE–AC01–02GJ79491

PROJECT LOCATION: MOAB, UTAH

REFERENCE: ESC ELECTRICAL SYSTEMS CONSULTANTS
ELECTRICAL CONSULTING ENGINEERS
FORT COLLINS COLORADO
(970) 224–9100

APPROVALS		DATE
DRAWN BY:	R. MOLANDER	7/29/04
ENGINEER	M. WELENC	7/29/04
PROJECT ENGINEER	G. SMITH	7/29/04
APPROVED BY:	M. MADRIL	7/29/04
PROJECT MANAGER	T. WRIGHT	7/29/04
DOE CONCURRENCE		

MOAB PROJECT
GROUND WATER INTERIM ACTION EXPANSION

WELL FIELD
ELECTRICAL ONE–LINE DIAGRAM

PROJECT NO. MOA–999–0006–06–008
DRAWING NO. X00817–R00–E04–D+
SHT. 12 OF 12

N:\MOA\999\0006\06\008\X00817\X0081700.DWG 07/30/04 1:20pm J50191

204–375F (1–LINE)

Attachment 3

UNITED STATES DEPARTMENT OF ENERGY

MOAB PROJECT

GROUND WATER INTERIM ACTION EXPANSION MOAB PROJECT, SITE

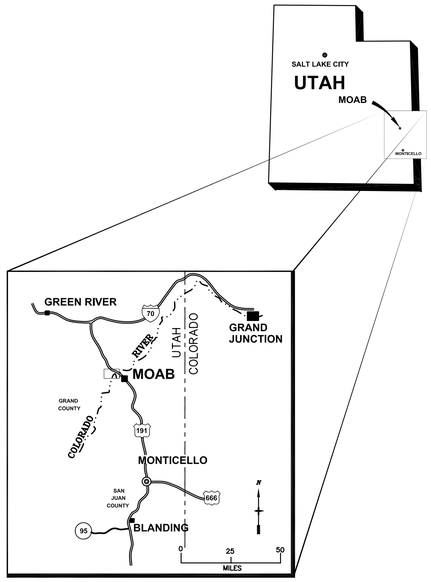

INDEX OF DRAWINGS

SHEET	TITLE	DRAWING NO.
1	TITLE SHEET	X01027–R01–T01–D+
2	PROJECT SITE PLAN	X01028–R01–F01–D+
3	WELL FIELD CONFIGURATION 3 PLAN AND DETAILS	X01029–R01–C01–D+
4	EXTRACTION WELL AND WELL VAULT DETAILS	X01030–R01–M01–D+
5	MISCELLANEOUS PIPE DETAILS	X01031–R01–M02–D+
6	ELECTRICAL SITE PLAN AND LEGEND	X01032–R01–E01–D+
7	WELL FIELD CONFIGURATION 3 ELECTRICAL PLAN AND DETAILS	X01033–R01–E02–D+
8	ELECTRICAL ONE–LINE DIAGRAM AND DETAIL	X01034–R01–E03–D+

ABBREVIATIONS

APPROX.	APPROXIMATE
BOTT.	BOTTOM
℄	CENTER LINE
CLR	CLEAR
CONC.	CONCRETE
CONT.	CONTINUATION
CORP.	CORPORATION
CSP	CORRUGATED STEEL PIPE
DIA. OR Ø	DIAMETER
EA.	EACH
DOE	DEPARTMENT OF ENERGY
E	EASTING
ELL	ELBOW
EL. OR ELEV.	ELEVATION
EQUA	EQUATION
EXIST	EXISTING
FH	FIRE HYDRANT
FLG	FLANGE
F.P.	FLOOD PLAIN
GA	GAUGE
GALV.	GALVANIZED
GPM	GALLONS PER MINUTE
G.I.P.	GALVANIZED IRON PIPE
HORIZ.	HORIZONTAL
IRR	IRRIGATION
INV	INVERT
MAX.	MAXIMUM
MH	MANHOLE
MIN.	MINIMUM
MW	MONITORING WELL
N	NORTHING
NA	NOT APPLICABLE
NO.	NUMBER
NOM	NOMINAL
N.I.C.	NOT IN CONTRACT
NPT	NATIONAL PIPE THREAD
NTS	NOT TO SCALE
OC	ON CENTER
OD	OUTSIDE DIAMETER
P.C.	POINT OF CURVATURE
PIP	PLASTIC IRRIGATION PIPE
P.I.	POINT OF INTERSECTION
P.O.B.	POINT OF BEGINNING
P.T.	POINT OF TANGENCY
PLC'S.	PLACES
PVC	POLYVINYL CHLORIDE
P.V.I.	POINT OF VERTICAL INTERSECTION
ROW	RIGHT–OF–WAY
SCH	SCHEDULE
SHT	SHEET
STA.	STATION
THK.	THICK
TP	TURNING POINT
TYP	TYPICAL
UDOT	UTAH DEPARTMENT OF TRANSPORTATION
UG	UNDERGROUND
UMTRA	URANIUM MILL TAILINGS REMEDIAL ACTION
VERT.	VERTICAL
V.P.I.	VERTICAL POINT OF INTERSECTION
WV	WATER VALVE

PLAN VIEW

- BOUNDARY OF WORK
- BURIED TELEPHONE/OPTICAL/ ELECTRICAL/GAS LINES
- RAILROAD TRACK
- WIRE FENCE
- CHAIN LINK FENCE
- DRAINAGE DITCH
- EXISTING ASPHALT ROAD/PARKING LOT
- EXISTING UNIMPROVED DIRT ROAD
- UNDERGROUND WATERLINE
- ABOVE GROUND GATED FLOOD IRRIGATION PIPELINE
- OVERHEAD ELECTRICAL LINE
- TRFFS/SHRUBS/BRUSH
- UTILITY POLE
- UNDERGROUND DRAINAGE CULVERT
- XXXX EXISTING MONITORING WELL
- SLOPE/FLOW ARROW
- TOP OF SLOPE
- SURVEY CONTROL POINT
- 6 DEPTH OF CONTAMINATION

WELL LEGEND

- △ BOREHOLE VIBRATING WIRE PIZOMETER
- ● WELL VIBRATING WIRE PIZOMETER
- □ WELL PIZOMETER
- ○ WELL MONITORING/PUMPING

NOTES:

1. THIS DESIGN HAS BEEN DEVELOPED FOR WORK TO BE CONSTRUCTED BY S. M. STOLLER CORPORATION.
2. ANY DEVIATIONS FROM THIS DESIGN SHALL REQUIRE THE APPROVAL OF THE PROJECT ENGINEER.

SECTION

- COMMON BORROW
- COMPACTED SOIL
- UNDISTURBED SOIL
- ROAD BASE
- CONCRETE
- SAND OR BEDDING MATERIAL
- GRAVEL OR DRAIN ROCK

DETAIL SYMBOL

1 — DETAIL NUMBER/SECTION LETTER

2 — SHEET ON WHICH DETAIL/SECTION IS TAKEN FROM

3 — SHEET ON WHICH DETAIL/SECTION IS DRAWN

DRAWING LEGEND

- CONTAMINATED MATERIAL
- 5210 EXISTING CONTOUR
- 5210 NEW CONTOUR
- BUILDING/STRUCTURE
- EXISTING ASPHALT SURFACE

REVISION NO.	DATE	DESCRIPTION	DRAWN BY	CHECKED BY	PROJECT A/E	APPROVAL
1	6/6/06	AS–BUILT CONFIGURATION 3	CJW		MWM	

U.S. DEPARTMENT OF ENERGY
GRAND JUNCTION, COLORADO

Work Performed by
S.M. Stoller Corporation
Under DOE Contract
No. DE–AC01–02GJ79491

PROJECT LOCATION: MOAB, UTAH

REFERENCE

APPROVALS		DATE
DRAWN BY:	J. BAVIERE	06/05
ENGINEER:	D.W. NORDEEN	06/05
PROJECT ENGINEER:		06/05
APPROVED BY:	M. MADRIL	06/05
PROJECT MANAGER:	K. KARP	06/05
DOE CONCURRENCE:	J. Berwick	06/05

MOAB PROJECT
GROUND WATER INTERIM ACTION CONFIGURATION 3

TITLE SHEET

PROJECT NO. MOA–999–0006–06–010
DRAWING NO. X01027–R01–T01–D+
SHT. 1 OF 8

N:\MOA\999\0006\06\010\X01027\X0102701.DWG 06/08/06 1:27pm WhitneyJ

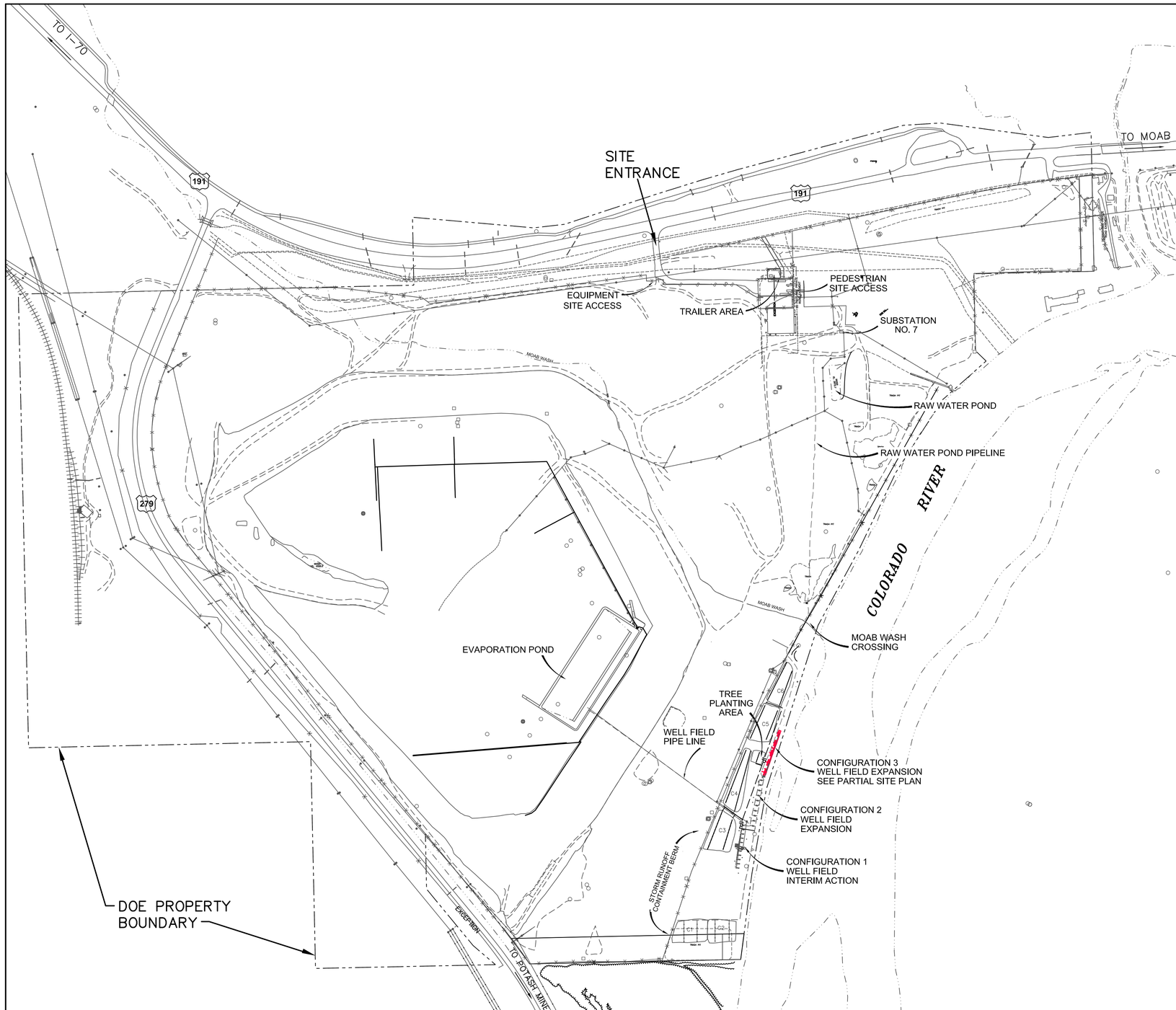

MOAB SITE PLAN

N

SCALE IN FEET

300 150 0 300 600 900

CONTOUR INTERVAL = 10 FEET

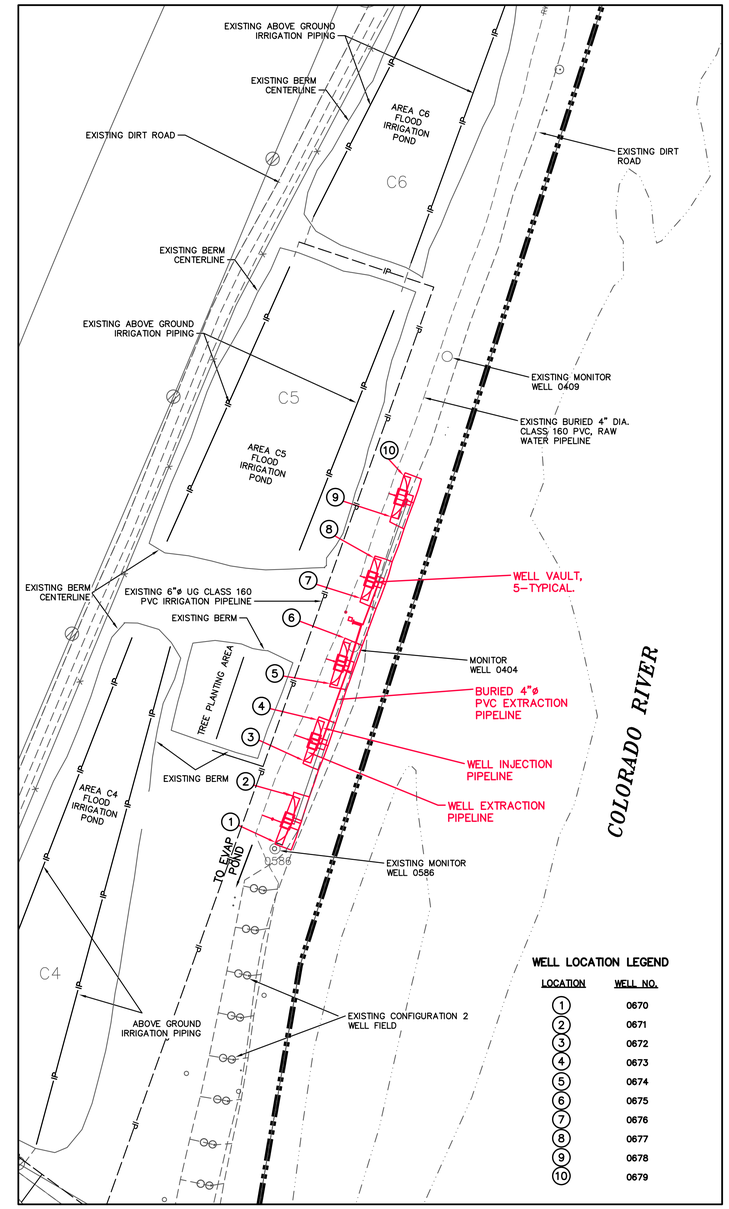

WELL LOCATION LEGEND

LOCATION	WELL NO.
1	0670
2	0671
3	0672
4	0673
5	0674
6	0675
7	0676
8	0677
9	0678
10	0679

PARTIAL SITE PLAN

N

SCALE IN FEET

50 25 0 50 100 150

CONTOUR INTERVAL = 10 FEET

REVISION NO.	DATE	DESCRIPTION	DRAWN BY	CHECKED BY	PROJECT A/E	APPROVAL
1	6/6/06	AS-BUILT CONFIGURATION 3	CJW		MWM	

U.S. DEPARTMENT OF ENERGY
GRAND JUNCTION, COLORADO

Work Performed by
S.M. Stoller Corporation
Under DOE Contract
No. DE-AC01-02GJ79491

PROJECT LOCATION: MOAB, UTAH

REFERENCE:

APPROVALS		DATE
DRAWN BY:	J. BAVIERE	06/05
ENGINEER:	D.W. NORDEEN	06/05
PROJECT ENGINEER:		06/05
APPROVED BY:	M. MADRIL	06/05
PROJECT MANAGER:	K. KARP	06/05
DOE CONCURRENCE:	J. BERWICK	06/05

MOAB PROJECT
GROUND WATER INTERIM ACTION CONFIGURATION 3

PROJECT SITE PLAN

PROJECT NO. MOA-999-0006-06-010

DRAWING NO. X01028-R01-C01-D+

SHT. 2 OF 8

THIS DRAWING IS FOR THE SOLE USE OF THE U.S. DEPARTMENT OF ENERGY AND ITS CONTRACTORS. IT IS NOT A LAND SURVEY PLAT, UTILITY LOCATION PLAT, OR OTHER IMPROVEMENT SURVEY PLAT AND IS NOT TO BE RELIED UPON FOR THE ESTABLISHMENT OF FENCE, BUILDING, OR OTHER FUTURE IMPROVEMENT LINES.

N:\MOA\999\0006\06\010\X01028\X0102801.DWG 06/08/06 10:48am Whitneyl

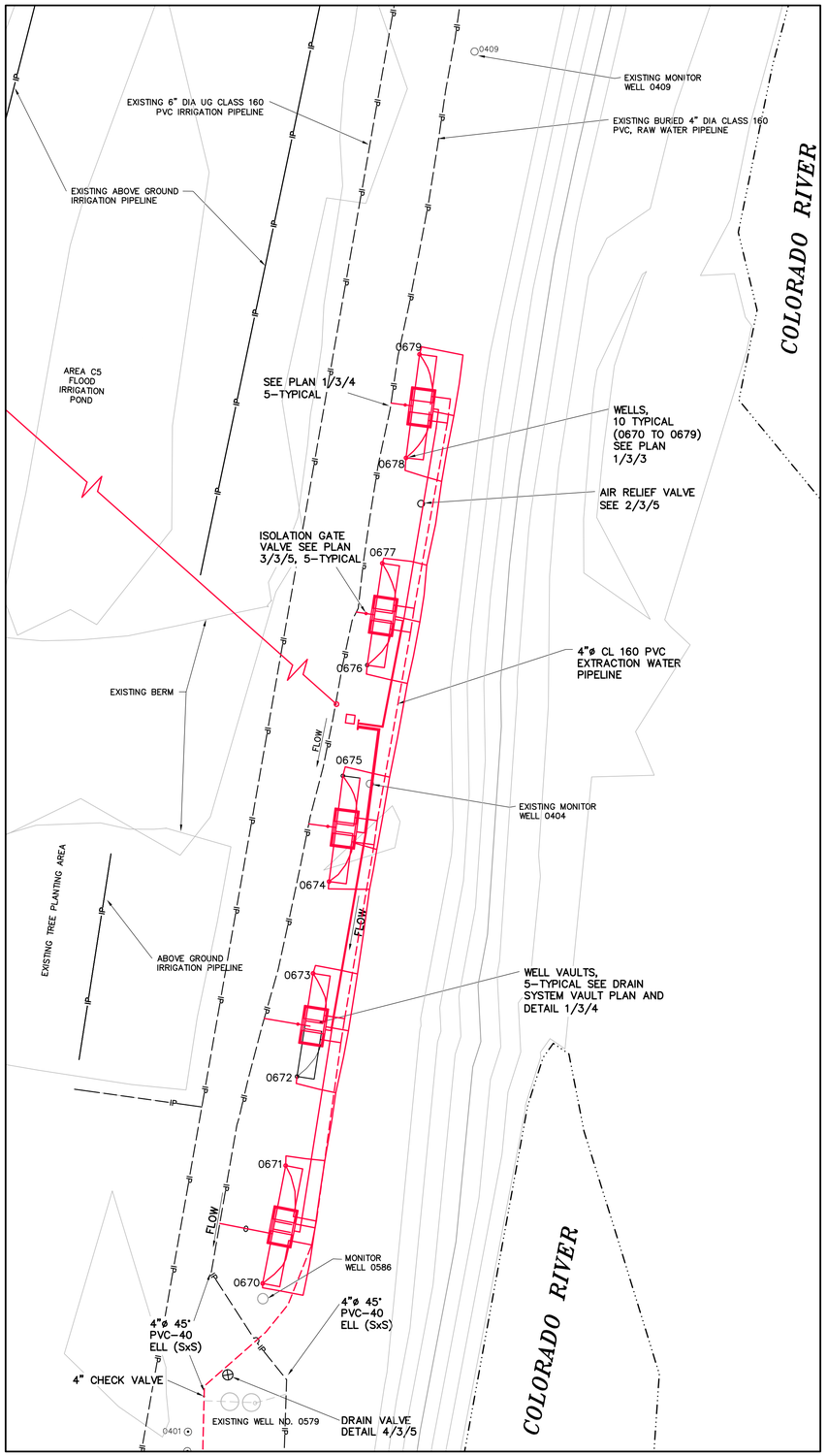

WELL FIELD PLAN
SCALE: 1":=20'-0"

N

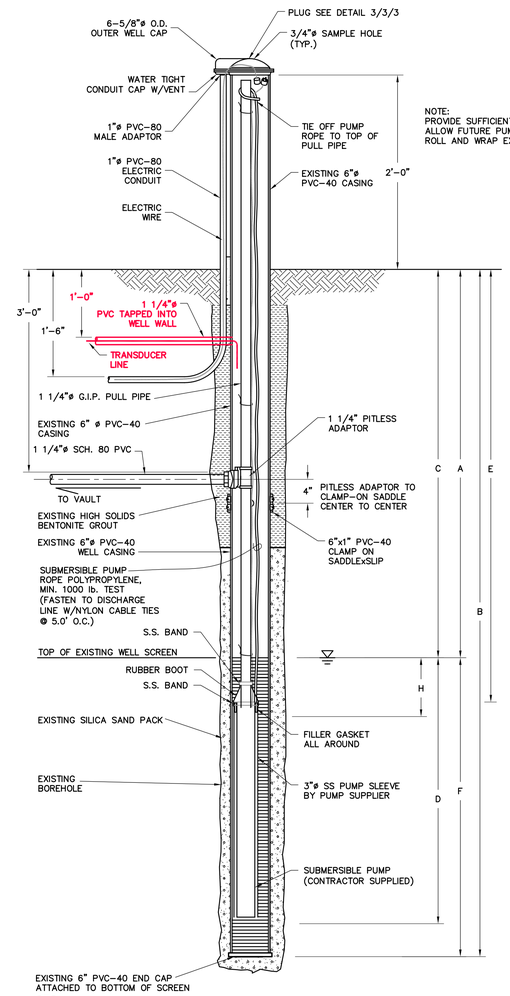

NOTE:
PROVIDE SUFFICIENT PUMP CABLE AND PUMP ROPE TO ALLOW FUTURE PUMP LOCATION TO BOTTOM OF WELL. ROLL AND WRAP EXCESS CABLE AND ROPE AT TOP OF WELL.

2/3|3 TYPICAL EXTRACTION WELL DETAIL
HORZ. 1"=1'-0"
VERT N.T.S.

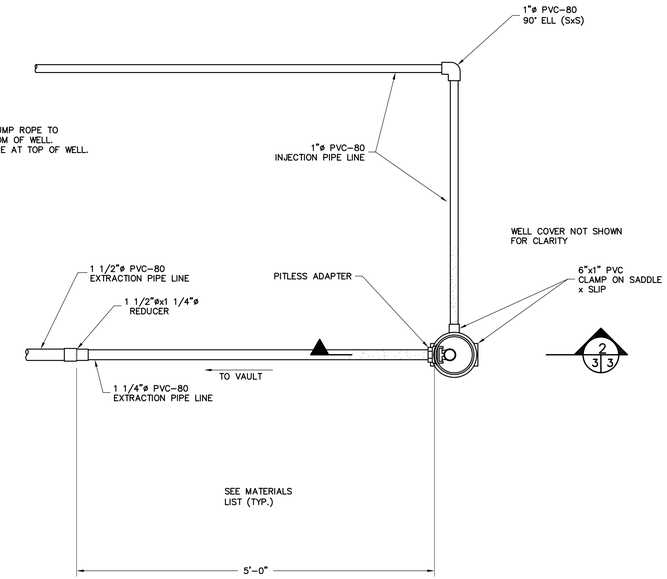

1/3|3 TYPICAL EXTRACTION WELL PLAN
1"=1'-0"

WELL TABLE

(ALL DEPTHS BELOW GROUND SURFACE)

WELL NO.	A* DTW*	B TD	C TOS	D SL	E PID	F* TST*	H* WAPI*
670	15	45	15	30	40	30	25
671	15	45	15	30	40	30	25
672	15	45	15	30	40	30	25
673	15	45	15	30	40	30	25
674	15	45	15	30	40	30	25
675	15	45	15	30	40	30	25
676	15	45	15	30	40	30	25
677	15	45	15	30	40	30	25
678	15	45	15	30	40	30	25
679	15	45	15	30	40	30	25

*= VALUE BASED ON APPROXIMATE RIVER BASE FLOW CONDITIONS.

NOTES:
DTW = DEPTH TO WATER (BELOW GROUND SURFACE)
TD = TOTAL DEPTH
TOS = TOP OF SCREEN DEPTH
SL = SCREEN LENGTH
PID = PUMP INTAKE DEPTH
TST = TOTAL SATURATED THICKNESS
S = SUMP LENGTH
WAPI = WATER ABOVE PUMP INTAKE

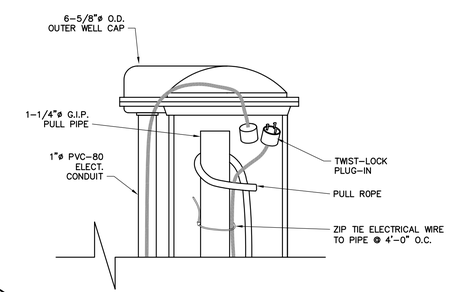

3/3|3 TYPICAL EXTRACTION WELL TOP DETAIL
3"=1'-0"

REVISION NO.	DATE	DESCRIPTION	DRAWN BY	CHECKED BY	PROJECT A/E	APPROVAL
1	6/6/06	AS-BUILT CONFIGURATION 3	CJW		MWM	

U.S. DEPARTMENT OF ENERGY
GRAND JUNCTION, COLORADO

WORK PERFORMED BY
S.M. STOLLER CORPORATION
UNDER DOE CONTRACT NO. DE-AC01-02GJ79491

PROJECT LOCATION: MOAB, UTAH

REFERENCE

APPROVALS		DATE
DRAWN BY:	J. BAVIERE	06/05
ENGINEER	D.W. NORDEEN	06/05
PROJECT ENGINEER		06/05
APPROVED BY:	M. MADRIL	06/05
PROJECT MANAGER	K. KARP	06/05
DOE CONCURRENCE	J. BERWICK	06/05

MOAB PROJECT
GROUND WATER INTERIM ACTION CONFIGURATION 3

WELL FIELD
CONFIGURATION 3
PLAN AND DETAILS

PROJECT NO. MOA-999-0006-06-010
DRAWING NO. X01029-R00-C02-D+
SHT. 3 OF 8

N:\MOA\999\0006\06\010\X01029\X0102901.DWG 06/08/06 12:46pm Whitneyl

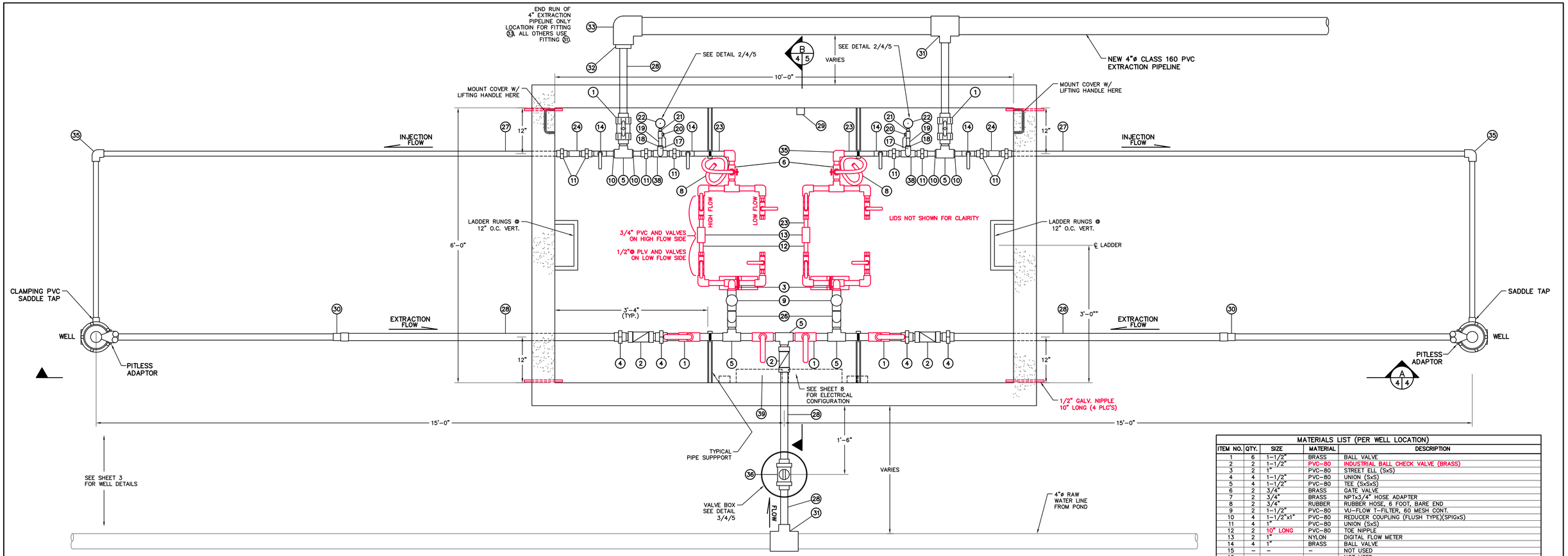

PLAN

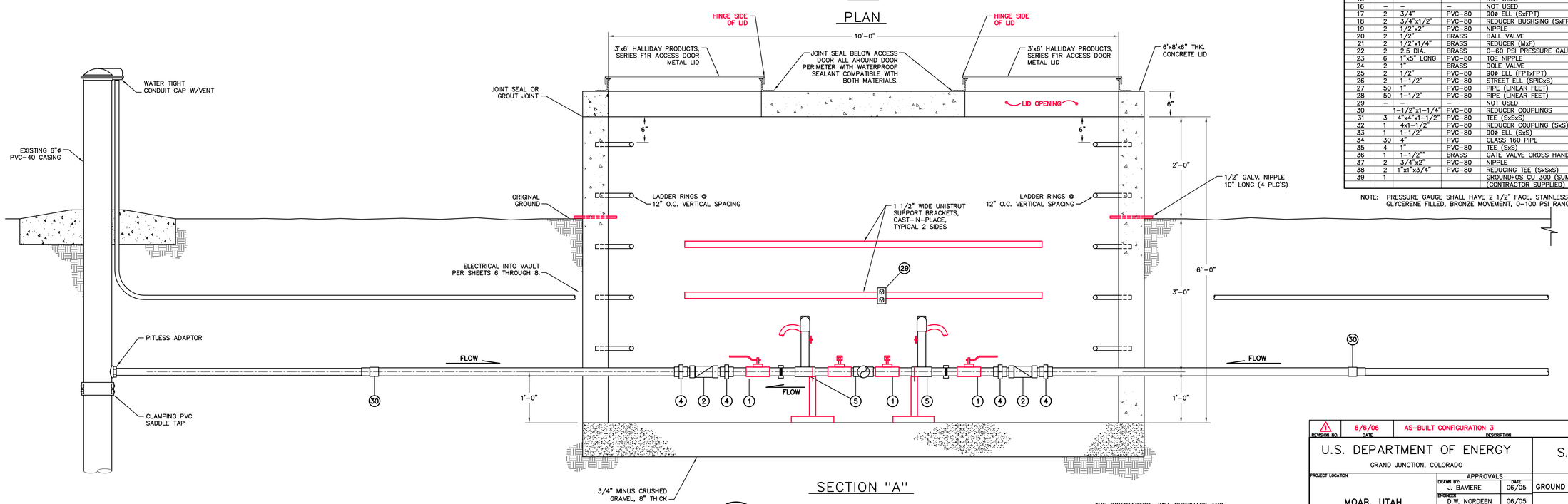

SECTION "A"

WELL DETAILS SHOWN AT LEFT FOR CLARITY

MATERIALS LIST (PER WELL LOCATION)

ITEM NO.	QTY.	SIZE	MATERIAL	DESCRIPTION
1	6	1-1/2"	BRASS	BALL VALVE
2	2	1-1/2"	PVC-80	INDUSTRIAL BALL CHECK VALVE (BRASS)
3	2	1"	PVC-80	STREET ELL (SxS)
4	4	1-1/2"	PVC-80	UNION (SxS)
5	4	1-1/2"	PVC-80	TEE (SxSxS)
6	2	3/4"	BRASS	GATE VALVE
7	2	3/4"	BRASS	NPTx3/4" HOSE ADAPTER
8	2	3/4"	RUBBER	RUBBER HOSE, 6 FOOT, BARE END
9	2	1-1/2"	PVC-80	VU-FLOW T-FILTER, 60 MESH CONT.
10	4	1-1/2"x1"	PVC-80	REDUCER COUPLING (FLUSH TYPE)(SPIGxS)
11	4	1"	PVC-80	UNION (SxS)
12	2	10" LONG	PVC-80	TOE NIPPLE
13	2	1"	NYLON	DIGITAL FLOW METER
14	4	1"	BRASS	BALL VALVE
15	–	–	–	NOT USED
16	–	–	–	NOT USED
17	2	3/4"	PVC-80	90ø ELL (SxFPT)
18	2	3/4"x1/2"	PVC-80	REDUCER BUSHSING (SxFPT)
19	2	1/2"x2"	PVC-80	NIPPLE
20	2	1/2"	BRASS	BALL VALVE
21	2	1/2"x1/4"	BRASS	REDUCER (MxF)
22	2	2.5 DIA.	BRASS	0-60 PSI PRESSURE GAUGE
23	6	1"x5" LONG	PVC-80	TOE NIPPLE
24	2	1"	BRASS	DOLE VALVE
25	2	1/2"	PVC-80	90ø ELL (FPTxFPT)
26	2	1-1/2"	PVC-80	STREET ELL (SPIGxS)
27	50	1"	PVC-80	PIPE (LINEAR FEET)
28	50	1-1/2"	PVC-80	PIPE (LINEAR FEET)
29	–	–	–	NOT USED
30		1-1/2"x1-1/4"	PVC-80	REDUCER COUPLINGS
31	3	4"x4"x1-1/2"	PVC-80	TEE (SxSxS)
32	1	4x1-1/2"	PVC-80	REDUCER COUPLING (SxS)
33	1	1-1/2"	PVC-80	90ø ELL (SxS)
34	30	4"	PVC	CLASS 160 PIPE
35	4	1"	PVC-80	TEE (SxS)
36	1	1-1/2"*	BRASS	GATE VALVE CROSS HANDLE
37	2	3/4"x2"	PVC-80	NIPPLE
38	2	1"x1"x3/4"	PVC-80	REDUCING TEE (SxSxS)
39	1			GROUNDFOS CU 300 (SUMP PUMP CONTROL BOX) (CONTRACTOR SUPPLIED)

NOTE: PRESSURE GAUGE SHALL HAVE 2 1/2" FACE, STAINLESS STEEL HOUSING, GLYCERENE FILLED, BRONZE MOVEMENT, 0-100 PSI RANGE.

1 / 3 4 DRAIN SYSTEM VAULT DETAILS

SCALE: 1" = 1'-0"

THE CONTRACTOR WILL PURCHASE AND DELIVER THE VAULT AND HALLIDAY COVER TO THE SITE FOR INSTALLATION BY THE SUBCONTRACTOR.

REVISION NO.	DATE	DESCRIPTION	DRAWN BY	CHECKED BY	PROJECT A/E	APPROVAL
1	6/6/06	AS-BUILT CONFIGURATION 3	CJW		MWM	

U.S. DEPARTMENT OF ENERGY
GRAND JUNCTION, COLORADO

Work Performed by
S.M. Stoller Corporation
Under DOE Contract No. DE-AC01-02GJ79491

PROJECT LOCATION: MOAB, UTAH

REFERENCE

APPROVALS		DATE
DRAWN BY:	J. BAVIERE	06/05
ENGINEER	D.W. NORDEEN	06/05
PROJECT ENGINEER		06/05
APPROVED BY:	M. MADRIL	06/05
PROJECT MANAGER	K. KARP	06/05
DOE CONCURRENCE	J. BERWICK	06/05

MOAB PROJECT
GROUND WATER INTERIM ACTION CONFIGURATION 3

EXTRACTION WELL AND WELL VAULT DETAILS

PROJECT NO. MOA-999-0006-06-010
DRAWING NO. X01030-R01-M01-D+
SHT. 4 OF 8

N:\MOA\999\0006\06\010\X01030\X0103001.DWG 06/08/06 12:58pm WhitneyJ

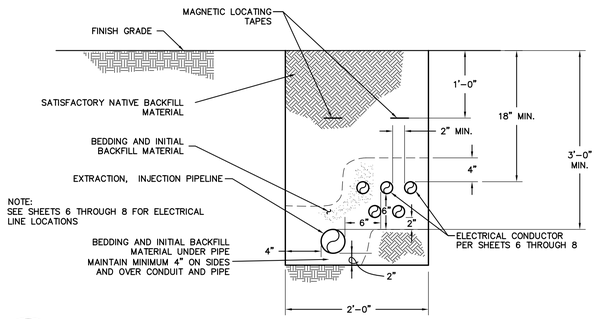

1 / 3 8 TYPICAL WELL FIELD PIPELINE TRENCH SECTION

1"=1'-0"

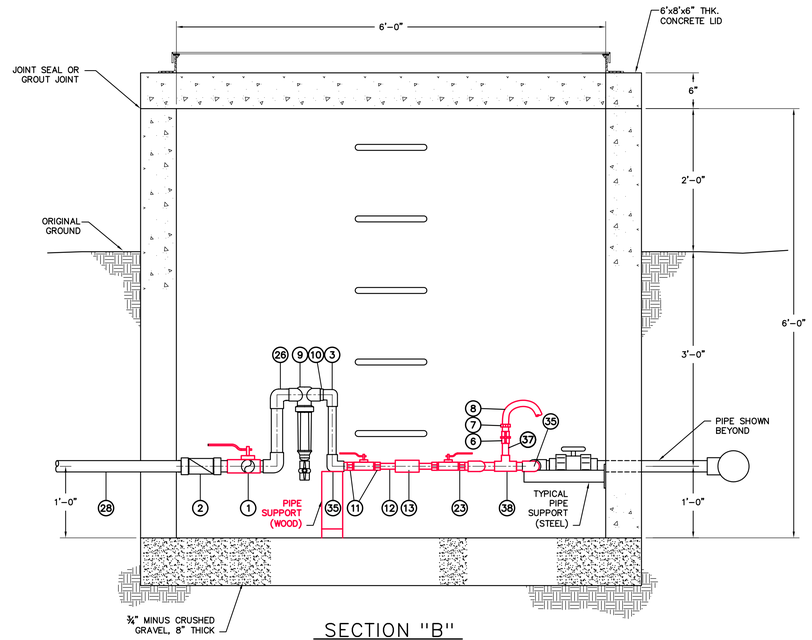

SECTION "B"

3 / 4 5 DRAIN SYSTEM VAULT DETAILS

SCALE: 1" = 1'-0"

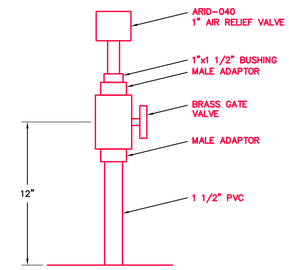

2 / 3 5 AIR/VACUUM RELEASE VALVE DETAIL

SCALE: 1" = 2"

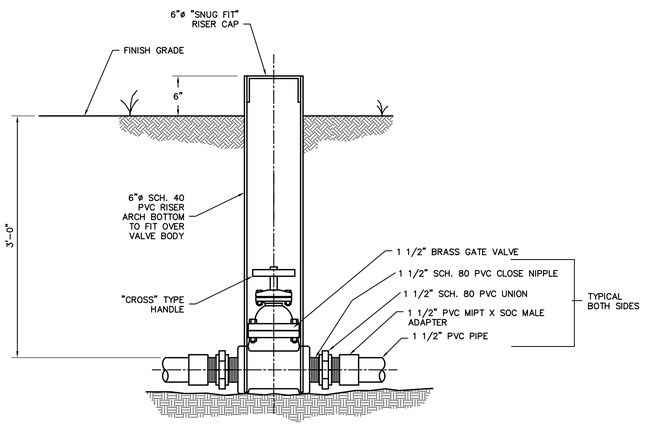

3 / 5 VALVE BOX DETAIL

NTS

3,4

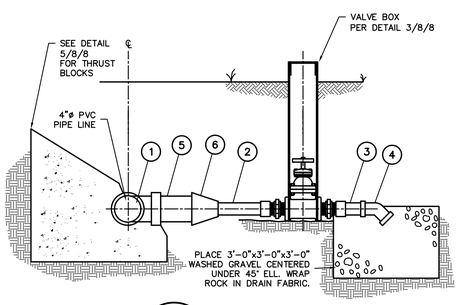

4 / 3 5 PIPELINE DRAIN DETAIL

NTS

DETAIL 4 – SCHEDULE	
ITEM	DESCRIPTION
1	4"x 4" x 4" TEE
2	1 1/2"ø SCH. 80 PVC (CUT TO FIT)
3	1 1/2"ø SCH. 80x5'-0" PVC
4	1 1/2"ø SCH. 80 PVC 45° ELL
5	4"ø x2'-0" SCH. 80 PVC
6	4"ø x 1 1/2"ø SCH. 80 PVC REDUCER

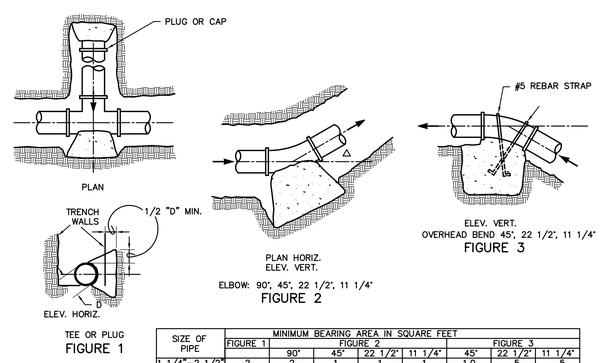

SIZE OF PIPE	MINIMUM BEARING AREA IN SQUARE FEET							
	FIGURE 1	FIGURE 2				FIGURE 3		
		90°	45°	22 1/2°	11 1/4°	45°	22 1/2°	11 1/4°
1 1/4"–2 1/2"	2	2	1	1	1	1.0	.5	.5
3"–4"	3	3	2	2	2	2.0	2.0	1.0

THRUST BLOCK NOTES

1. ALL BEARING SURFACES OF THRUST BLOCK SHALL BE AGAINST UNDISTURBED SOIL OR SOIL COMPACTED TO 95% MAX. DENSITY.
2. THRUST BLOCKS SHALL BE 4" MIN. THICKNESS; 3,000 PSI

5 / 8 8 THRUST BLOCK DETAIL

NTS

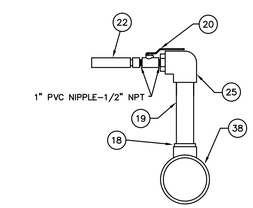

NOTES:

1. 1"ø AND SMALLER PIPE FITTINGS TO BE SCH. 80 PVC.
2. SEE SHEET 4 MATERIAL LIST FOR NUMBERED ITEMS.

2 / 3 3 PRESSURE GAUGE DETAIL

SCALE: 1" = 4"

REVISION NO.	DATE	DESCRIPTION	DRAWN BY	CHECKED BY	PROJECT A/E	APPROVAL
1	6/6/06	AS-BUILT CONFIGURATION 3	CJW		MWM	

U.S. DEPARTMENT OF ENERGY
GRAND JUNCTION, COLORADO

Work Performed by
S.M. Stoller Corporation
Under DOE Contract
No. DE-AC01-02GJ79491

PROJECT LOCATION: MOAB, UTAH

REFERENCE

APPROVALS		DATE
DRAWN BY:	J. BAVIERE	06/05
ENGINEER:	D.W. NORDEEN	06/05
PROJECT ENGINEER:		06/05
APPROVED BY:	M. MADRIL	06/05
PROJECT MANAGER:	K. KARP	06/05
DOE CONCURRENCE:	J. BERWICK	06/05

MOAB PROJECT
GROUND WATER INTERIM ACTION CONFIGURATION 3

MISCELLANEOUS PIPE DETAILS

PROJECT NO. MOA-999-0006-06-010
DRAWING NO. X01031-R01-M02-D+
SHT. 5 OF 8

N:\MOA\999\0006\06\010\X01031\X0103101.DWG 06/08/06 10:30am WhitneyJ

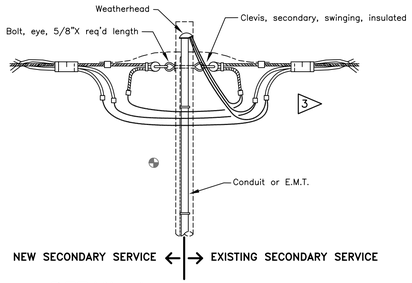

DETAIL 1
OVERHEAD SECONDARY
DEAD-END TAP OVER ASSEMBLY

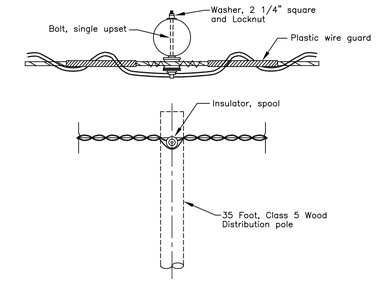

DETAIL 2
OVERHEAD SECONDARY
IN-LINE ASSEMBLY

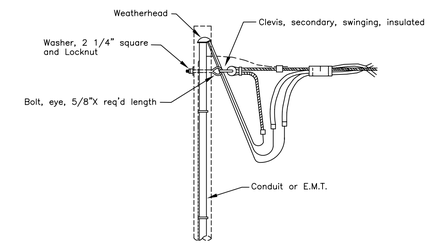

DETAIL 3
OVERHEAD SECONDARY
DEAD-END ASSEMBLY

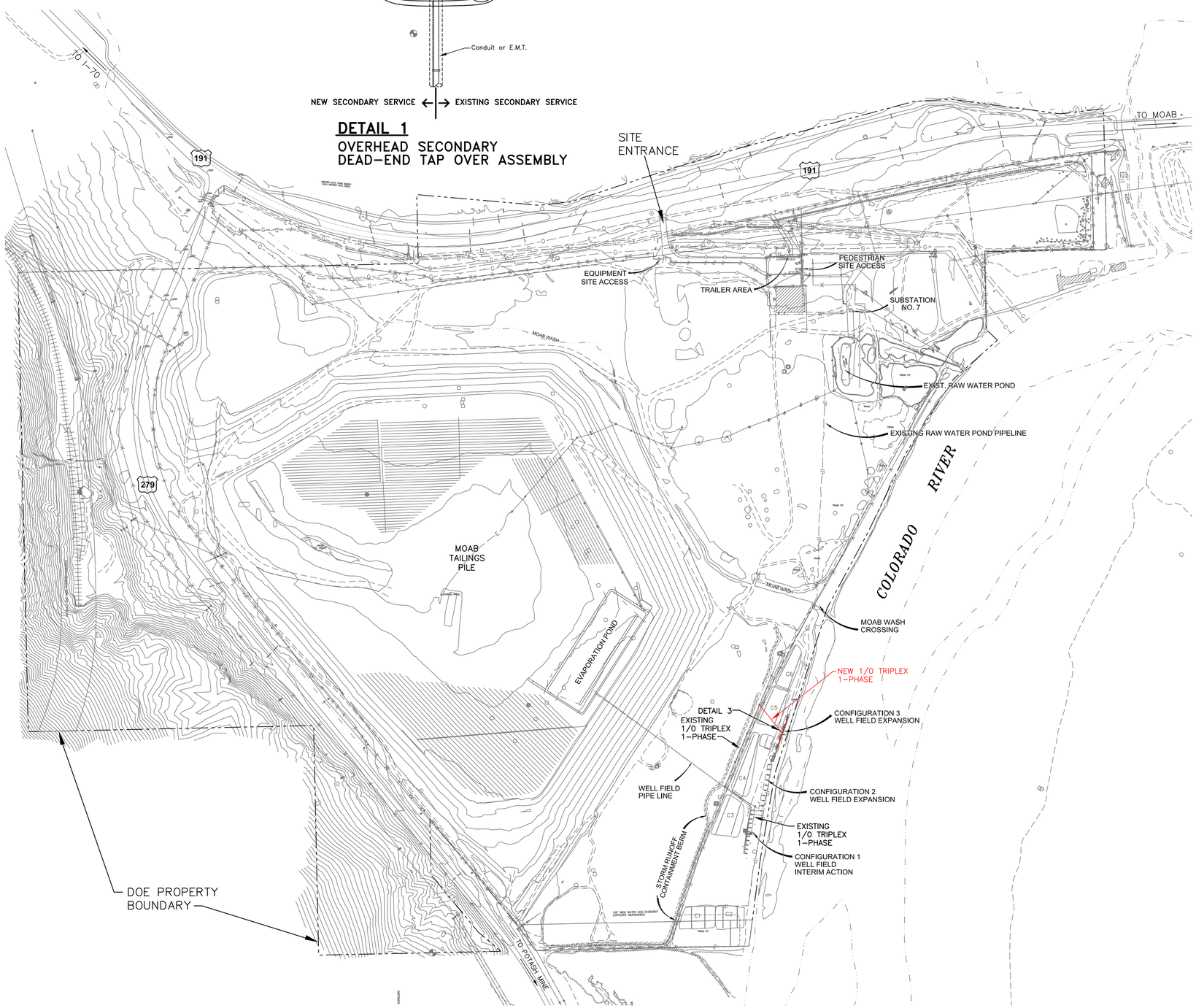

PARTIAL ELECTRICAL SITE PLAN
SCALE: 1" = 200'

SCALE IN FEET
300 150 0 300 600 900

CONTOUR INTERVAL = 10 FEET

north

THIS DRAWING IS FOR THE SOLE USE OF THE U.S. DEPARTMENT OF ENERGY AND ITS CONTRACTORS. IT IS NOT A LAND SURVEY PLAT, UTILITY LOCATION PLAT, OR OTHER IMPROVEMENT SURVEY PLAT AND IS NOT TO BE RELIED UPON FOR THE ESTABLISHMENT OF FENCE, BUILDING, OR OTHER FUTURE IMPROVEMENT LINES.

ELECTRICAL LEGEND

- OVERHEAD DISTRIBUTION CONDUCTOR (QUAD OR TRIPLEX INDICATED)
  - EXISTING POWER POLE
  - NEW POWER POLE
- CONDUIT AND/OR CONDUCTOR CONCEALED IN FLOOR, SLAB, OR BELOW GRADE
- DUPLEX RECEPTACLE OUTLET (42")
  - GFI - GROUND FAULT INTERRUPTING
  - WP - WEATHERPROOF
- BRANCH CIRCUIT PANELBOARD- NEMA 1 ENCLOSURE UNLESS OTHERWISE NOTED. REFER TO PANEL SCHEDULE FOR SIZE & SPECIFICATION
- WELL MOTOR
- TRANSFORMER
- POWER CABLE DESIGNATION (SEE SCHEDULE)
- ELECTRICAL FLAG NOTE

NOTES

1. ALL CLEARANCES AND PROTECTIVE DEVICES TO BE IN CONFORMANCE TO THE MOST STRINGENT REQUIREMENTS OF EITHER THE NESC, NEC OR OTHER CODES OF GOVERNMENTAL OR REGULATING AUTHORITIES AS APPLICABLE.
2. GUY POLES AS REQUIRED.
3. MODIFY EXISTING OVERHEAD SECONDARY DEAD-END ASSEMBLY. ADD SECONDARY INSULATED CLEVIS AND TAP EXISTING LINE. REMOVE GUY WIRES AS REQUIRED TO INSTALL NEW SECONDARY DEAD END.

REVISION NO.	DATE	DESCRIPTION	DRAWN BY	CHECKED BY	PROJECT A/E	APPROVAL
1	6/6/06	AS-BUILT CONFIGURATION 3	CJW		MWM	

U.S. DEPARTMENT OF ENERGY
GRAND JUNCTION, COLORADO

Work Performed by
S.M. Stoller Corporation
Under DOE Contract
No. DE-AC01-02GJ79491

PROJECT LOCATION: MOAB, UTAH

APPROVALS		DATE
DRAWN BY:	R. MOLANDER	07/05
ENGINEER	J.E. BROCKWAY	07/05
PROJECT ENGINEER		07/05
APPROVED BY:	M. MADRIL	07/05
PROJECT MANAGER	K. KARP	07/05
DOE CONCURRENCE	J. BERWICK	07/05

REFERENCE
ESC ELECTRICAL SYSTEMS CONSULTANTS
ELECTRICAL CONSULTING ENGINEERS
FORT COLLINS COLORADO
(970) 224-9100

MOAB PROJECT
GROUND WATER INTERIM ACTION CONFIGURATION 3

ELECTRICAL SITE PLAN AND LEGEND

PROJECT NO. MOA-999-0006-06-010
DRAWING NO. X01032-R01-E01-D+
SHT. 6 OF 8

N:\MOA\999\0006\06\010\X01032\X0103201.DWG 06/08/06 1:12pm WhitneyJ

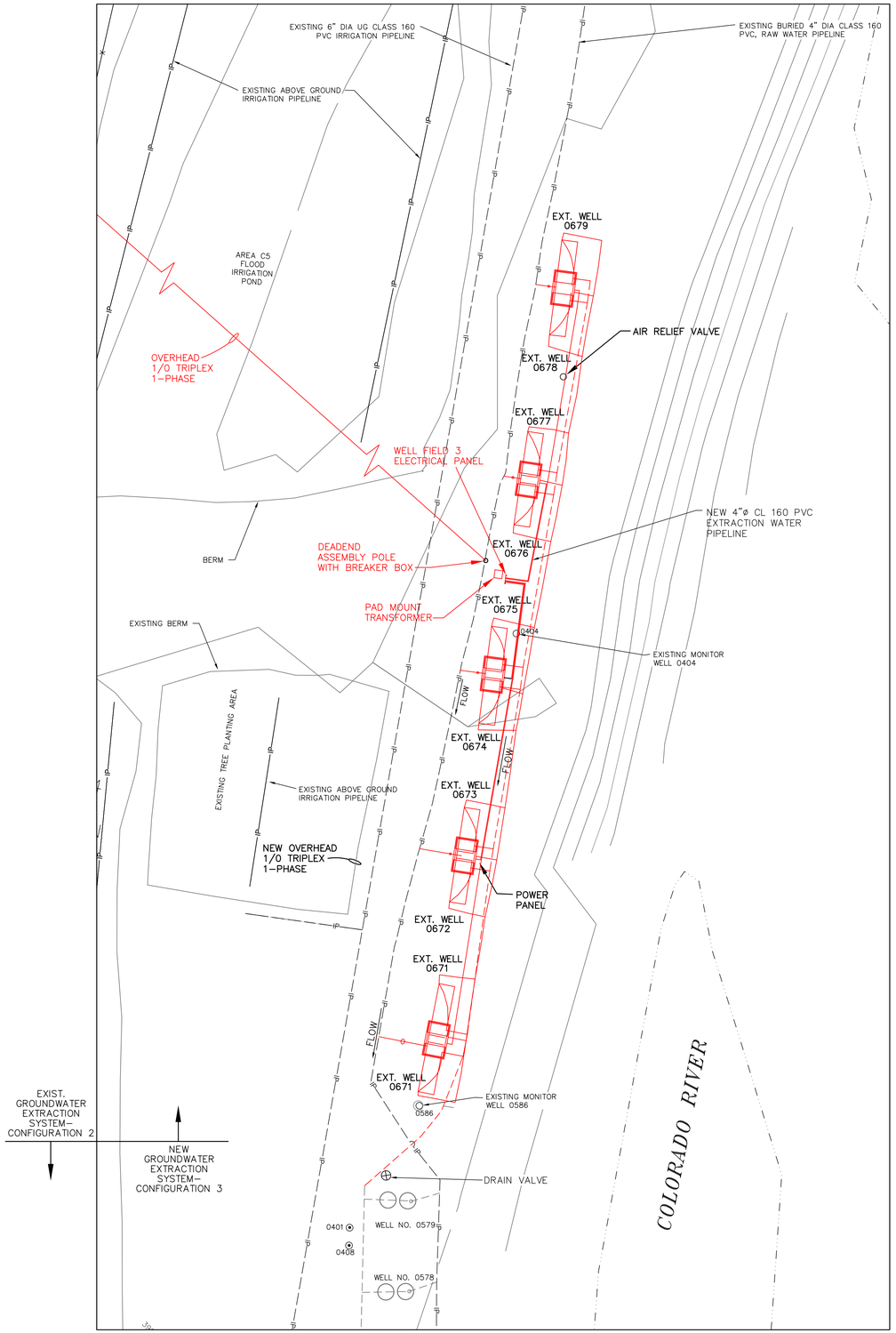

WELL FIELD 3 ELECTRICAL SITE PLAN

SCALE: 1" = 20'-0"

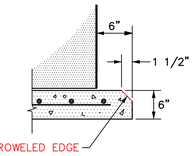

TRANSFORMER CONCRETE PAD DETAIL

NO SCALE

PANEL SCHEDULE

CIRCUIT NUMBER	BREAKER TRIP	LOAD DESCRIPTION	LOAD WATTS	PHASE	LOAD WATTS	LOAD DESCRIPTION	BREAKER TRIP	CIRCUIT NUMBER
1	50/3	EXT. WELL NO. 0670 & 0671 PANEL	1756	A	1756	EXT. WELL NO. 0676 & 0677 PANEL	50/3	2
3			1756	B	1756			4
5	50/3	EXT. WELL NO. 0672 & 0673 PANEL	1756	A	1765	EXT. WELL NO. 0678 & 0679 PANEL	50/3	6
7			1756	B	1756			8
9	50/3	EXT. WELL NO. 0674 & 0675 PANEL	1756	A	200	GFI RECEPTACLE	20	10
11			1756	B	.	SPARE	20	12
13	20	SPARE	.	A	.	SPARE	20	14
15	20	SPARE	.	B	.	SPARE	20	16
17		SPACE		A		SPACE		18
19		SPACE		B		SPACE		20
21		SPACE		A		SPACE		22
23		SPACE		B		SPACE		24
25		SPACE		A		SPACE		26
27		SPACE		B		SPACE		28
29		SPACE		A		SPACE		30

MFGR.	SQUARE-D or EQUAL
TYPE	NQOD
VOLT/PHASE	120/240 VOLT 1-PHASE
WIRE	3-WIRE W/GRND

LOAD	A	8980 VA	
	B	8780 VA	
	TOTAL	17,760 VA	74 AMP

MAIN	100
MLO	–
BUS	100
MOUNTING	ENCLOSURE NEMA 3R

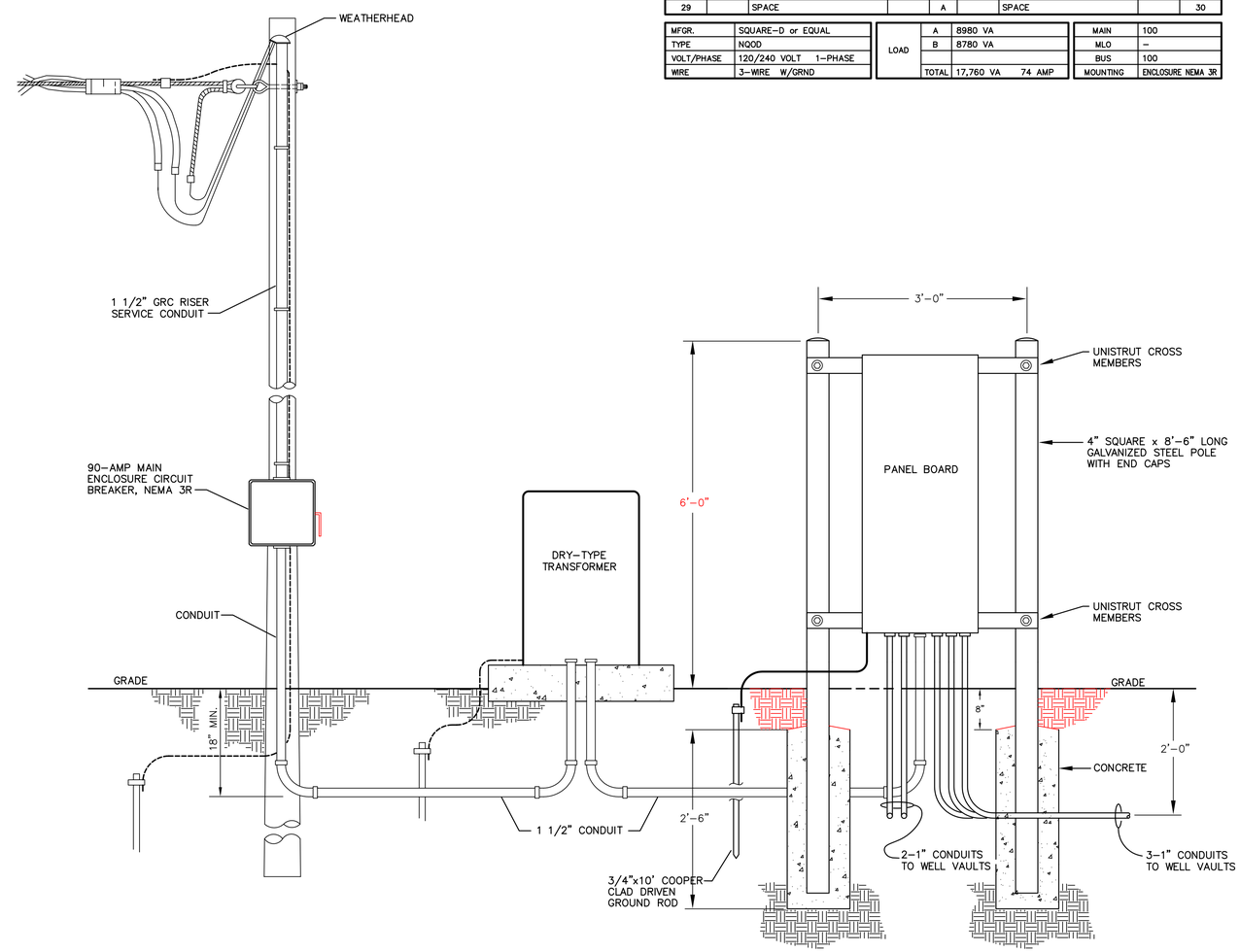

WELL FIELD ELECTRICAL ENCLOSURE ELEVATION

SCALE: 1" = 1'-0"

ELECTRICAL FLAG NOTES

1. AT EXISTING DEADEND POLE ADD A NEW DEADEND ASSEMBLY TO BRING NEW 1/0 TRIPLEX NORTH TO WELL FIELD 3.

REVISION NO.	DATE	DESCRIPTION	DRAWN BY	CHECKED BY	PROJECT A/E	APPROVAL
1	6/6/06	AS-BUILT CONFIGURATION 3	CJW		MWM	

U.S. DEPARTMENT OF ENERGY
GRAND JUNCTION, COLORADO

WORK PERFORMED BY
S.M. STOLLER CORPORATION
UNDER DOE CONTRACT NO. DE-AC01-02GJ79491

PROJECT LOCATION: MOAB, UTAH

REFERENCE

ESC ELECTRICAL SYSTEMS CONSULTANTS
ELECTRICAL CONSULTING ENGINEERS
FORT COLLINS, COLORADO
(970) 224-9100

APPROVALS		DATE
DRAWN BY:	R. MOLANDER	07/05
ENGINEER	J.E. BROCKWAY	07/05
PROJECT ENGINEER		07/05
APPROVED BY:	M. MADRIL	07/05
PROJECT MANAGER	K. KARP	07/05
DOE CONCURRENCE	J. BERWICK	07/05

MOAB PROJECT
GROUND WATER INTERIM ACTION CONFIGURATION 3

WELL FIELD CONFIGURATION 3 PLAN AND DETAILS

PROJECT NO. MOA-999-0006-06-010
DRAWING NO. X01033-R01-E02-D+
SHT. 7 OF 8

N:\MOA\999\0006\06\010\X01033\X0103301.DWG 06/08/06 1:17pm Whitneyj

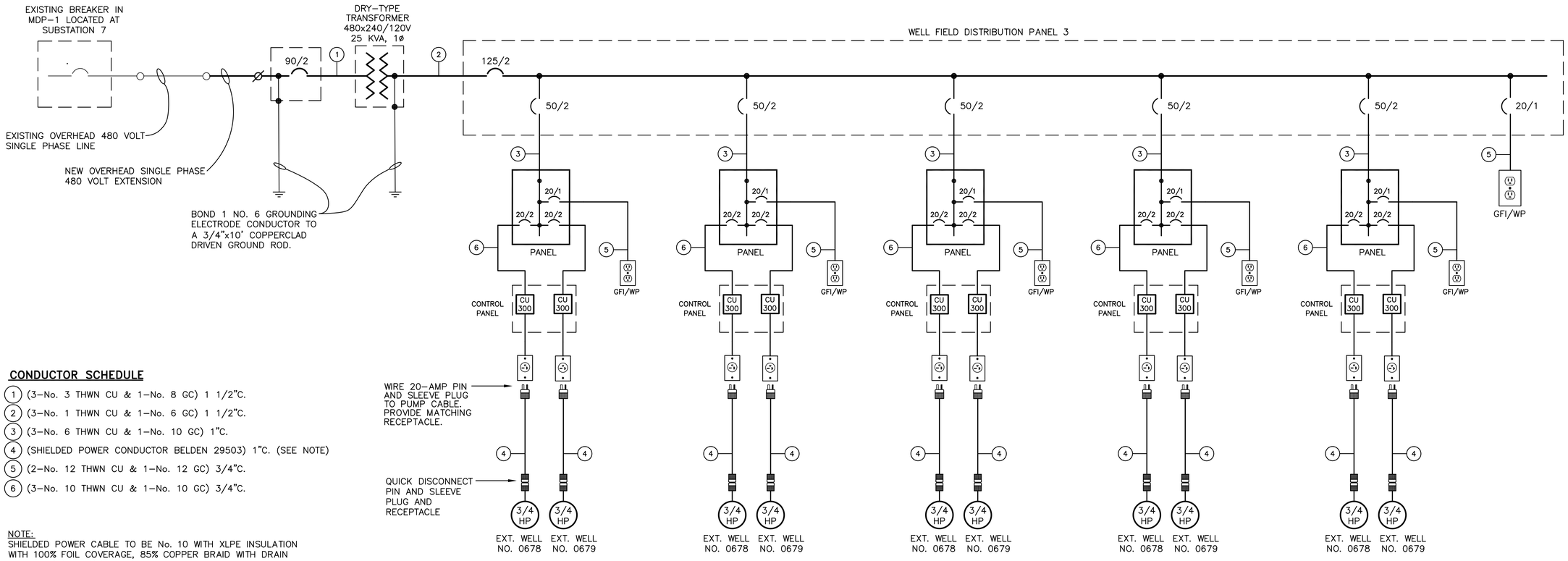

CONDUCTOR SCHEDULE

1. (3-No. 3 THWN CU & 1-No. 8 GC) 1 1/2"C.
2. (3-No. 1 THWN CU & 1-No. 6 GC) 1 1/2"C.
3. (3-No. 6 THWN CU & 1-No. 10 GC) 1"C.
4. (SHIELDED POWER CONDUCTOR BELDEN 29503) 1"C. (SEE NOTE)
5. (2-No. 12 THWN CU & 1-No. 12 GC) 3/4"C.
6. (3-No. 10 THWN CU & 1-No. 10 GC) 3/4"C.

NOTE:
SHIELDED POWER CABLE TO BE No. 10 WITH XLPE INSULATION WITH 100% FOIL COVERAGE, 85% COPPER BRAID WITH DRAIN WIRE BELDEN BELOFOIL.

WELL FIELD CONFIGURATION 3
ELECTRICAL ONE LINE DIAGRAM

SERVICE CHARACTERISTICS: 120/240 VOLT, 1-PHASE, 3-WIRE

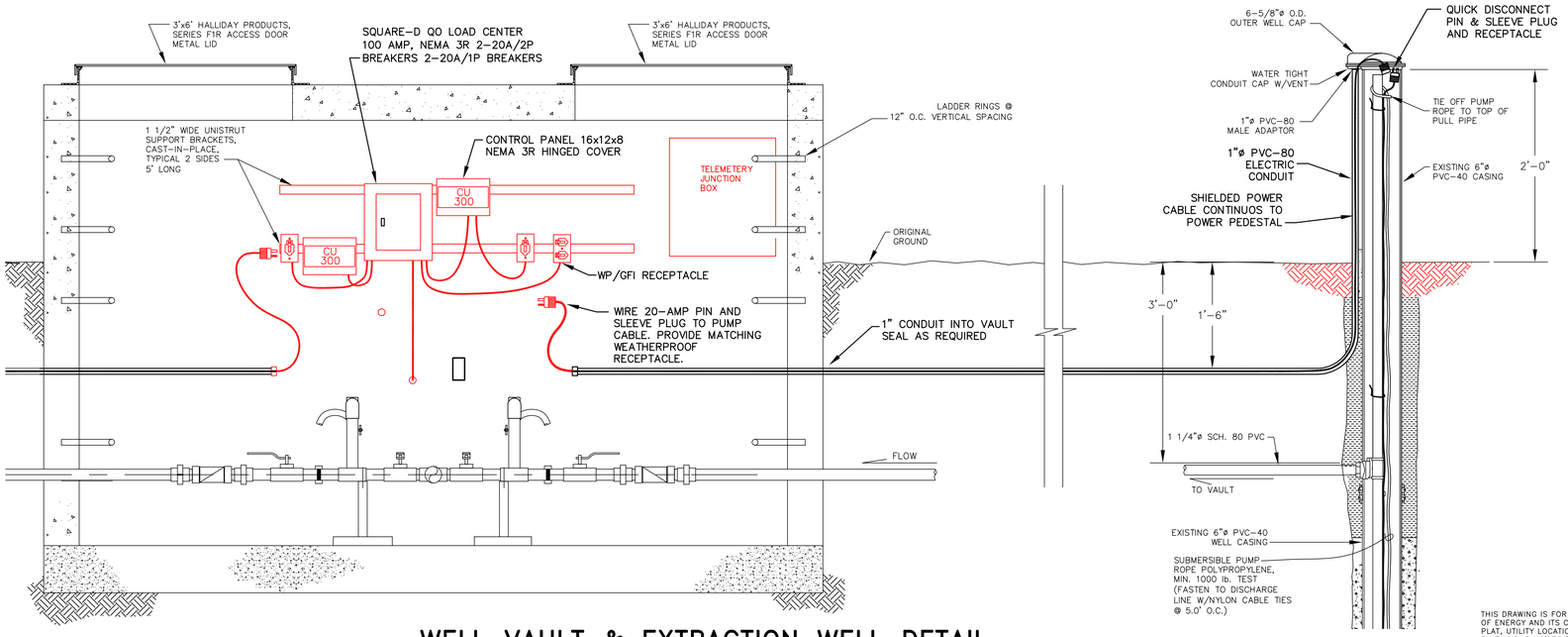

WELL VAULT & EXTRACTION WELL DETAIL

SCALE: 1" = 1'-0"

THIS DRAWING IS FOR THE SOLE USE OF THE U.S. DEPARTMENT OF ENERGY AND ITS CONTRACTORS. IT IS NOT A LAND SURVEY PLAT, UTILITY LOCATION PLAT, OR OTHER IMPROVEMENT SURVEY PLAT AND IS NOT TO BE RELIED UPON FOR THE ESTABLISHMENT OF FENCE, BUILDING, OR OTHER FUTURE IMPROVEMENT LINES.

REVISION NO.	DATE	DESCRIPTION	DRAWN BY	CHECKED BY	PROJECT A/E	APPROVAL
1	6/6/06	AS-BUILT CONFIGURATION 3	CJW		MWM	

U.S. DEPARTMENT OF ENERGY
GRAND JUNCTION, COLORADO

Work Performed by
S.M. Stoller Corporation
Under DOE Contract No. DE-AC01-02GJ79491

PROJECT LOCATION: MOAB, UTAH

REFERENCE: ESC ELECTRICAL SYSTEMS CONSULTANTS
ELECTRICAL CONSULTING ENGINEERS
FORT COLLINS COLORADO
(970) 224-9100

APPROVALS		DATE
DRAWN BY:	R. MOLANDER	07/05
ENGINEER	J.E. BROCKWAY	07/05
PROJECT ENGINEER		07/05
APPROVED BY:	M. MADRIL	07/05
PROJECT MANAGER	K. KARP	07/05
DOE CONCURRENCE	J. BERWICK	07/05

MOAB PROJECT
GROUND WATER INTERIM ACTION CONFIGURATION 3

ELECTRICAL ONE-LINE DIAGRAM AND DETAIL

PROJECT NO. MOA-999-0006-06-010
DRAWING NO. X01034-R01-E03-D+
SHT. 8 OF 8

N:\MOA\999\0006\06\010\X01034\X0103401.DWG 06/08/06 1:25pm WhitneyJ

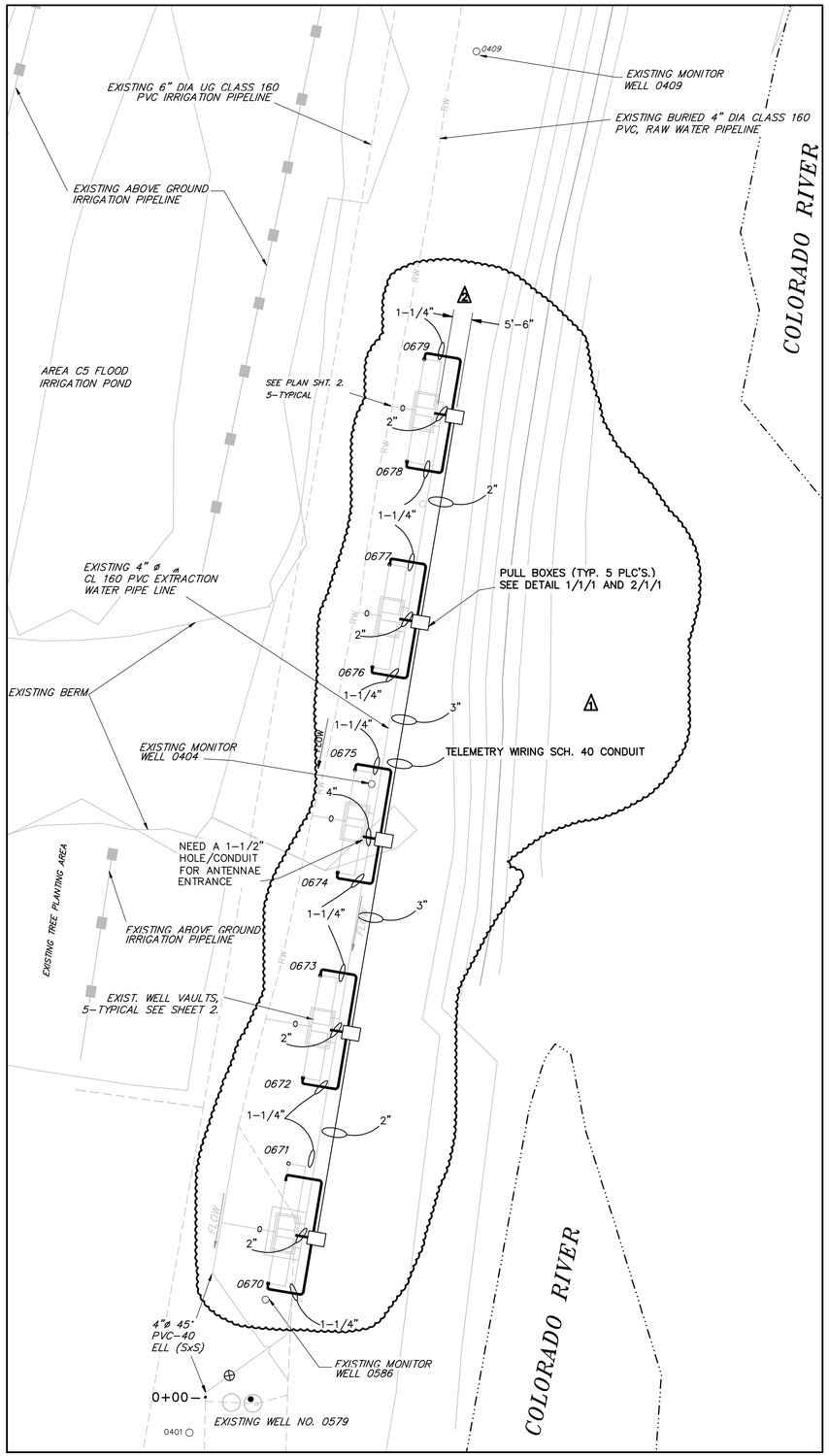

WELL FIELD PLAN
SCALE: 1"=20'-0"

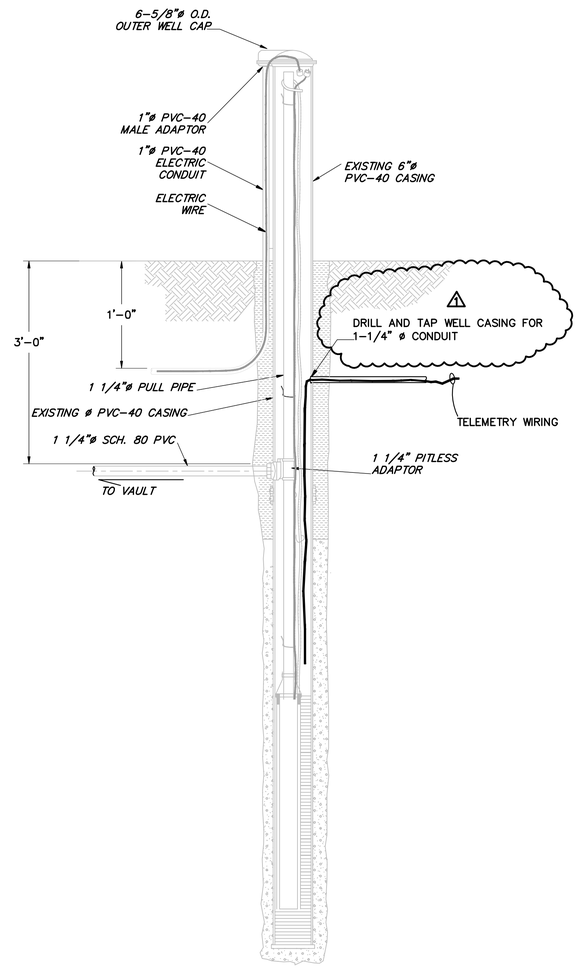

TYPICAL EXTRACTION WELL DETAIL
HORZ. 1"=1'-0"
VERT N.T.S.

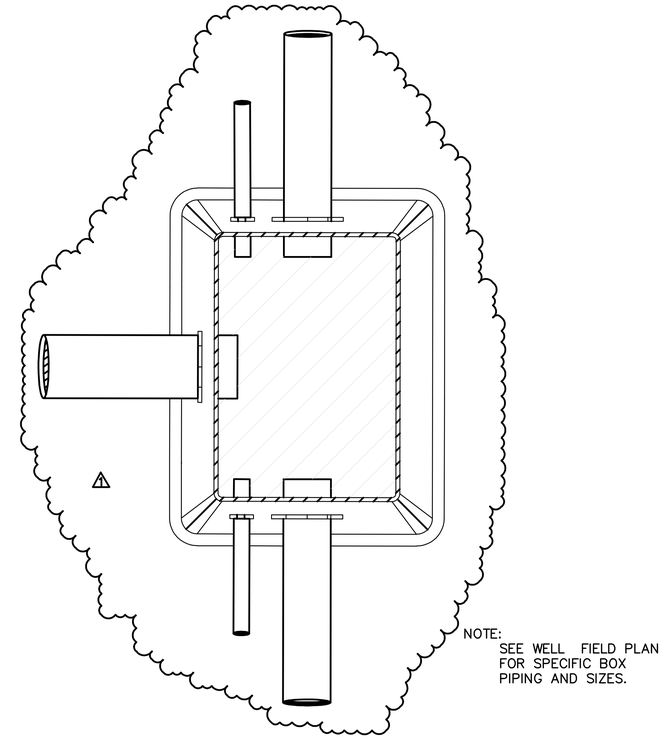

1 / 1 PULL BOX DETAIL PLAN VIEW
NTS

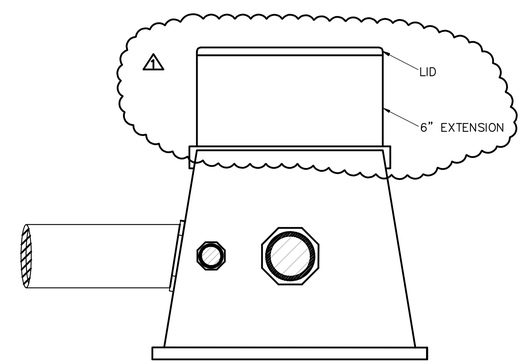

2 / 1 PULL BOX DETAIL ELEV VIEW
NTS

REVISION NO.	DATE	DESCRIPTION	DRAWN BY	CHECKED BY	PROJECT A/E	APPROVAL
2	3/5/07	AS-BUILT CORRECTED DISTANCES	JW	KP	MM	MM
1	3/24/06	AS BUILT WELL VAULT	MJ	MM	MM	MM

U.S. DEPARTMENT OF ENERGY
GRAND JUNCTION, COLORADO

Work Performed by
S.M. Stoller Corporation
Under DOE Contract
No. DE-AC01-02GJ79491

PROJECT LOCATION
MOAB PROJECT SITE
MOAB, UTAH

REFERENCE

APPROVALS		DATE
DRAWN BY:	M. JUAREZ	3/03/06
ENGINEER	M. MADRIL	3/03/06
PROJECT ENGINEER	M. MADRIL	3/03/06
APPROVED BY:	J. FORD	3/03/06
PROJECT MANAGER	K. KARP	3/03/06
DOE CONCURRENCE	(SEE RECORDS)	

GROUND WATER INTERIM ACTION
CONFIGURATION 3 TELEMETRY INSTALLATION

CONDUIT ROUTING PLAN

PROJECT NO. MOA-999-0006-06-011
DRAWING NO. X01552-R02-F01-D+
SHT. 1 OF 2

N:\MOA\999\0006\06\011\X01552\X0155202.DWG 03/05/07 12:38pm Whitneyj

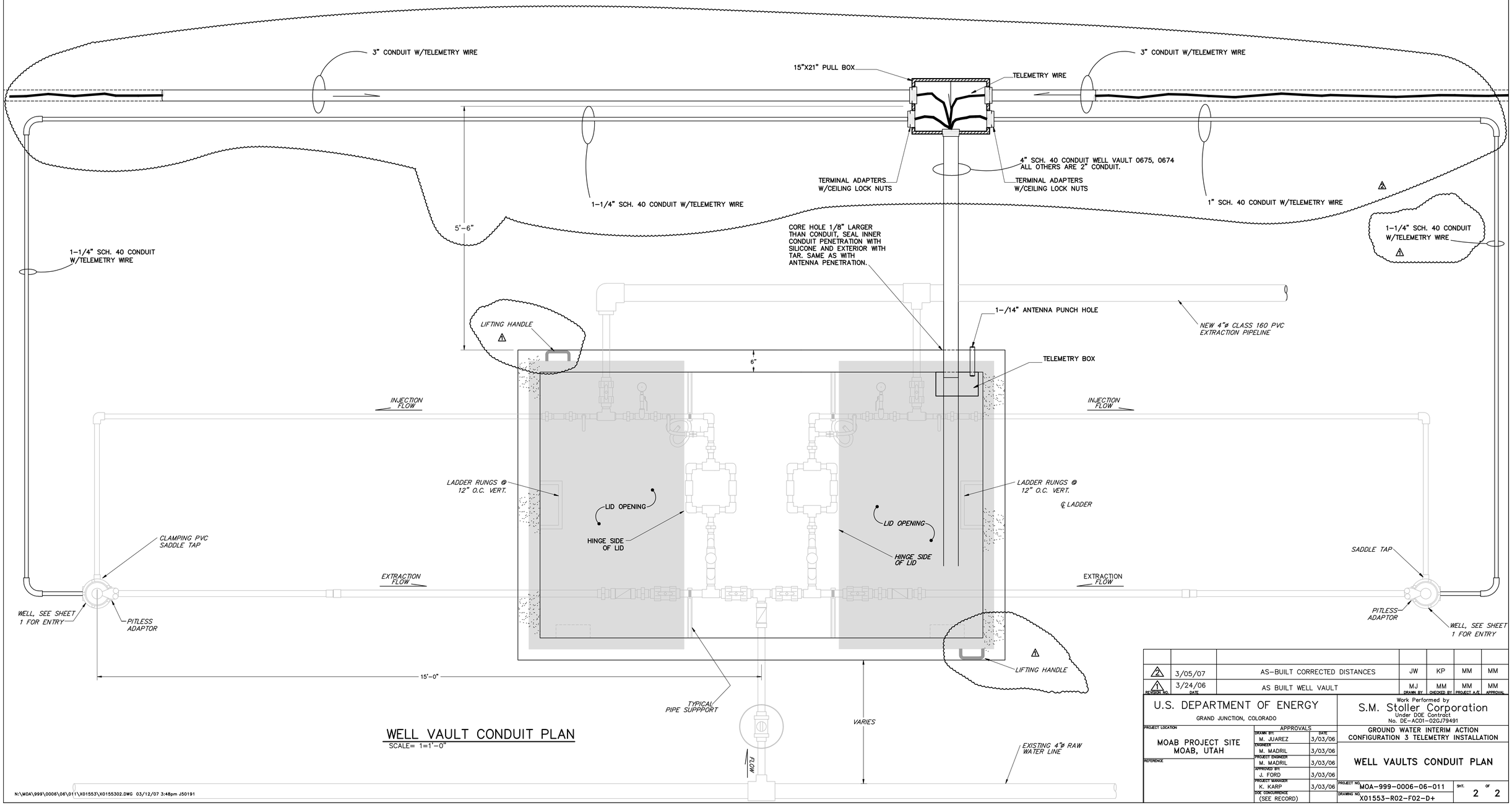

WELL VAULT CONDUIT PLAN

SCALE= 1=1'-0"

REVISION NO.	DATE		DRAWN BY	CHECKED BY	PROJECT A/E	APPROVAL
2	3/05/07	AS-BUILT CORRECTED DISTANCES	JW	KP	MM	MM
1	3/24/06	AS BUILT WELL VAULT	MJ	MM	MM	MM

U.S. DEPARTMENT OF ENERGY
GRAND JUNCTION, COLORADO

Work Performed by
S.M. Stoller Corporation
Under DOE Contract
No. DE-AC01-02GJ79491

PROJECT LOCATION
MOAB PROJECT SITE
MOAB, UTAH

REFERENCE

APPROVALS	DATE
DRAWN BY: M. JUAREZ	3/03/06
ENGINEER: M. MADRIL	3/03/06
PROJECT ENGINEER: M. MADRIL	3/03/06
APPROVED BY: J. FORD	3/03/06
PROJECT MANAGER: K. KARP	3/03/06
DOE CONCURRENCE: (SEE RECORD)	

GROUND WATER INTERIM ACTION
CONFIGURATION 3 TELEMETRY INSTALLATION

WELL VAULTS CONDUIT PLAN

PROJECT NO. MOA-999-0006-06-011
DRAWING NO. X01553-R02-F02-D+
SHT. 2 OF 2

N:\MOA\999\0006\06\011\X01553\X0155302.DWG 03/12/07 3:48pm J50191